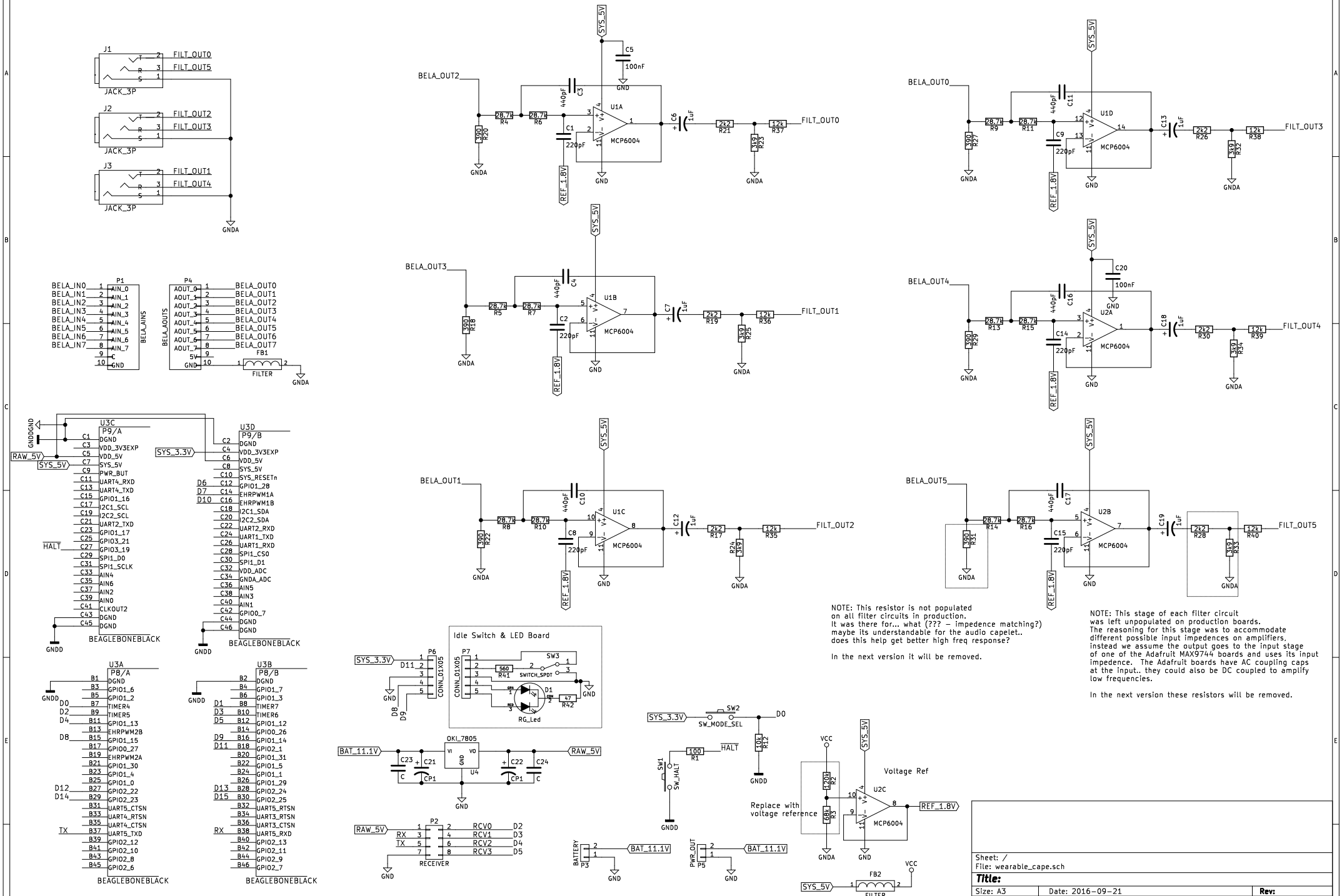

Sheet: /
File: wearable_cape.sch

Title:

Size: A3	Date: 2016-09-21	Rev:
KiCad E.D.A. kicad (5.1.2-1)-1		Id: 1/1