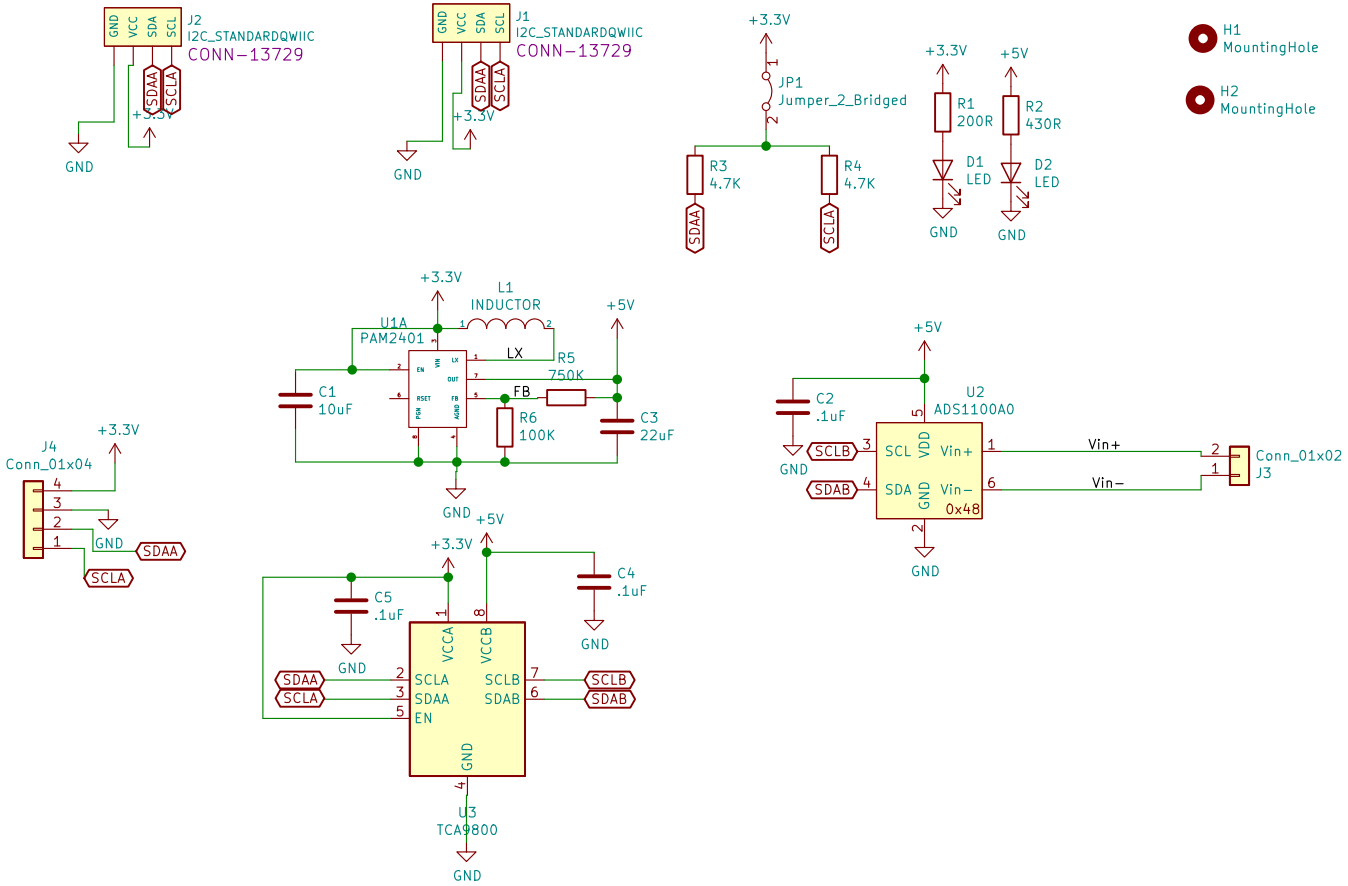

Sheet: /
File: ADS1100_5V.sch

Title: ADS1100 Breakout Board

Size: A4	Date: 2020-03-24	**Rev: A**
KiCad E.D.A. kicad (5.1.5)-3		Id: 1/1