Pressurized Water Reactor CAD Design

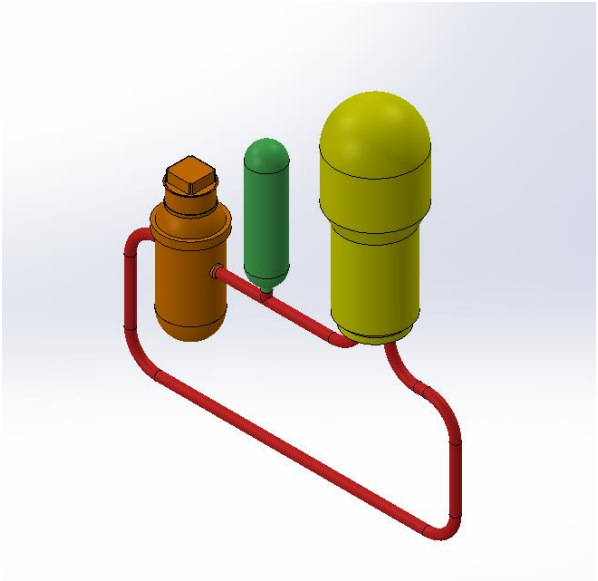

Jordan R Kruse
jxk5760@psu.edu
4-26-2017

The product I designed was the hot water loop of a medium sized pressurized water reactor (PWR) designed to generate power. The client that this is being designed for are any nuclear power companies, such as Westinghouse Nuclear, Duke Energy, TVA, or many others. This design is not meant to be revolutionary, as it follows the basic design principals of traditional pressurized water reactors. Due to the immense complexity of nuclear reactors and their subsystems and limitations to my time and capabilities, this reactor omits many critical operation and safety components that would be seen in a fully designed reactor. From this design, the client will be able to interpret and understand the general hot water loop system and subsystems and how they will operate and apply in power generation.

The criteria that this project seeks to meet is to model a general simplified nuclear pressurized water reactor hot water loop and the major subsystems within in, including the reactor vessel, reactor core, pressurizer, and steam generator. This should be able to demonstrate the closed hot water loop and how water is heated, remains pressurized, and conducts heat transfer to generate steam. This design will not include major safety components, smaller subsystems such as pressure valves and pumps, or major details in the pressurizer and steam generator. This model seeks to identify the major components of the reactor core and make a semi-detailed of the reactor core, including fuel and control rods, fuel assemblies, control rod systems, and the reactor vessel itself.

The fuel assemblies were designed by referencing general PWR fuel assembly models provided by MIT and by generating appropriate measurements and design changes myself. Although I initially designed each fuel assembly with the full 264 fuel rods per assembly, I soon found that solidworks would not be able to handle the eventual 35,840 fuel rods after combining them into a core without major performance issues. I made the design decision to simply model the rods together as a red block with control rods inserted inside and able to be extracted or inserted as needed. The fuel assemblies include 25 control rods used to control the fission in the reactor, and are connected with a control rod cluster. While this cluster would normally include a control rod drive mechanism to move the control rods, this was not modeled due to it not being a primary part of the core and due to its complexity. I then assembled the fuel assemblies into a medium sized core consisting of around 140 assemblies in an optimal pattern again provided by MIT. Water loop and travel systems inside the reactor were not modeled due to their immense

complexity and additional parts. I then modeled the core vessel around the core itself, along with a base for the core and enough overhead space for the control rods to be appropriately extracted when needed. I then ran the first stages of the hot water loop out of the reactor vessel, and attached a pressurizer and steam generator to the loop. The internal components of the pressurizer and steam generator were also not modeled as the focus of this system was primarily the core and they would have consisted of a large number of small and complex components.

This system operates by running a closed pressurized loop of extremely hot water through various systems to maintain a closed water loop capable of transferring its heat to a secondary system that generates steam and runs a steam turbine. The water is first run through the reactor vessel and through the reactor core, where it is heated by the energy produced from the controlled fission reactions occurring within the fuel assemblies. The control rods can be inserted or removed in increments to control the intensity of these reactions and the heat that they generate. The now heated water is run out of the reactor vessel and passes by a pressurizer that creates an air pocket. This pressurizer can either decrease pressure by spraying water droplets and condensing the steam in the vessel, or increase the pressure by heating and evaporating the water coming in. After running through this pressurizer, the water then continues through the hot water loop to the steam generator, where it undergoes heat transfer to heat a secondary unpressurized water loop (not modeled) that vaporizes into steam and goes off to power a steam turbine (not modeled). The hot water loop remains in its closed loop and now having transferred its heat, returns to the reactor core to be reheated.

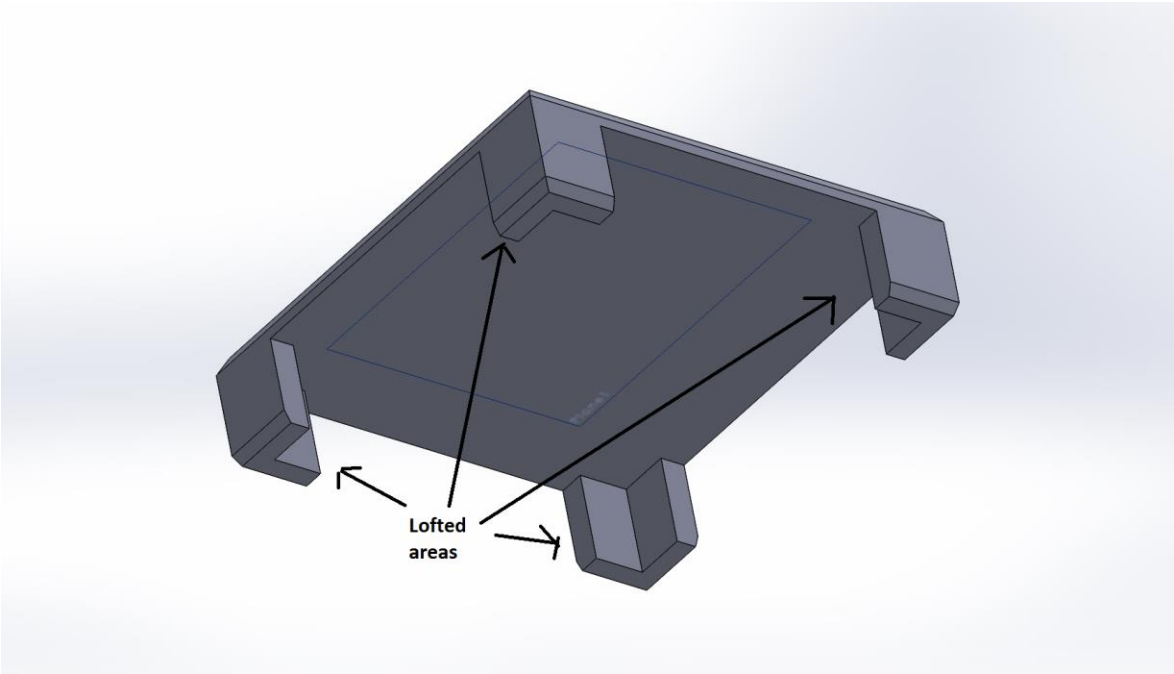

Figure 1-Lofts in Bottom Nozzle

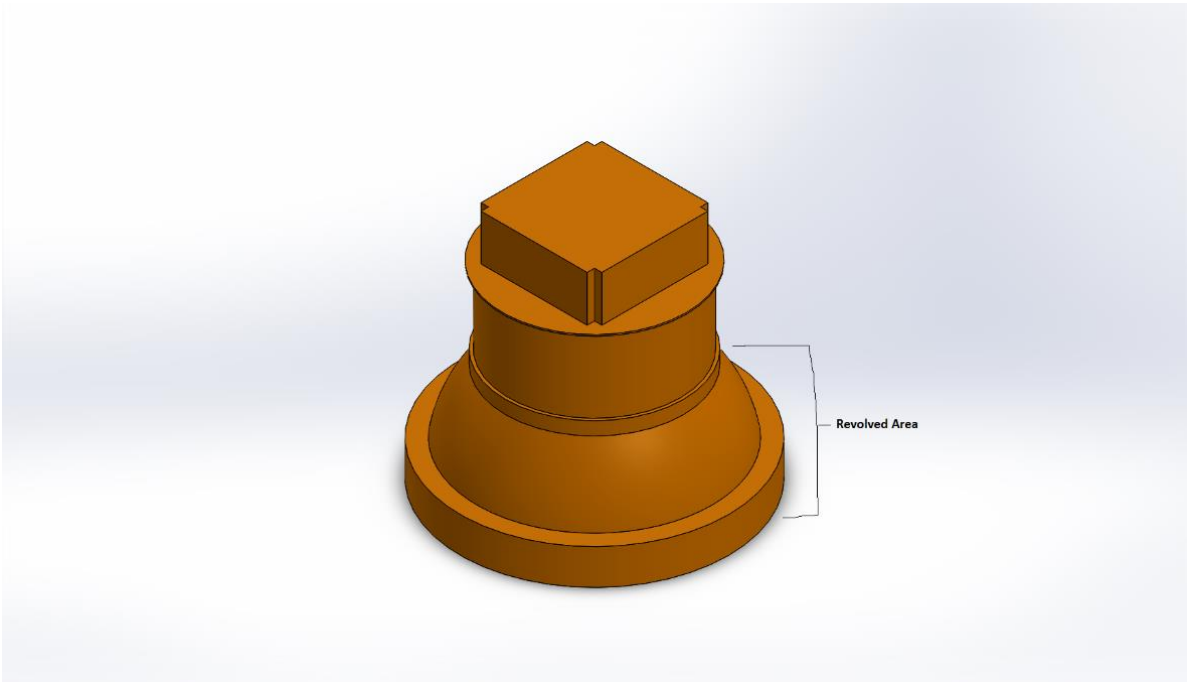

Figure 2-Revolve in top of vessel

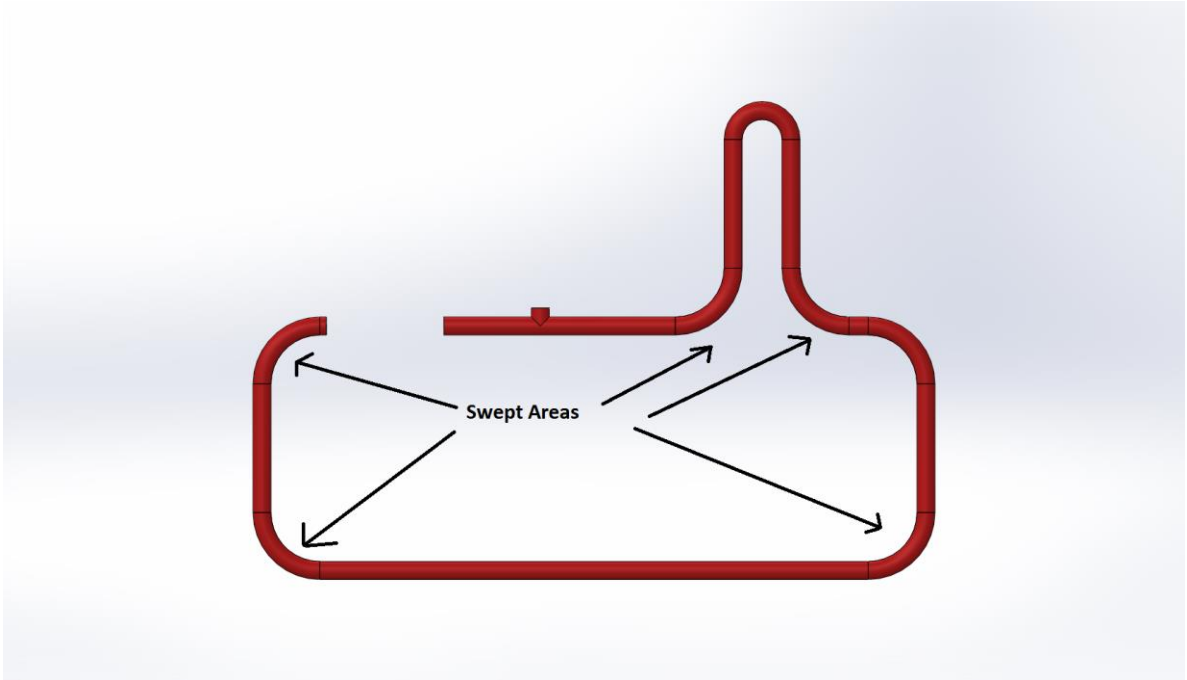

Figure 3-Sweeps in hot water loop

Cuts and Extrudes apparent in fuel assembly drawings

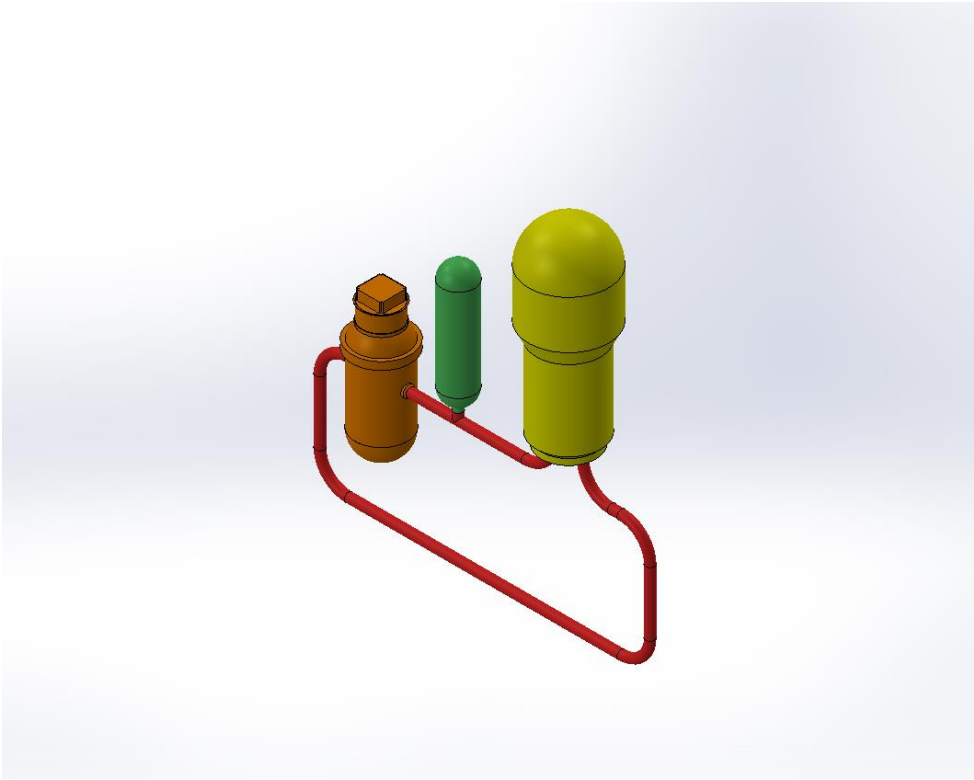

Figure 4 - System Isometric

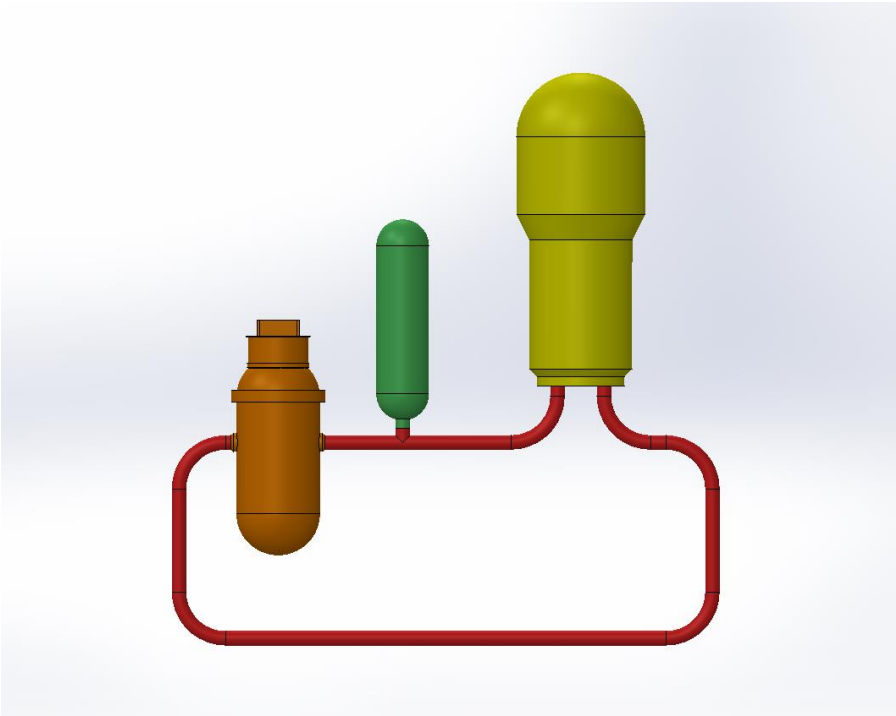

Figure 5 - System front view

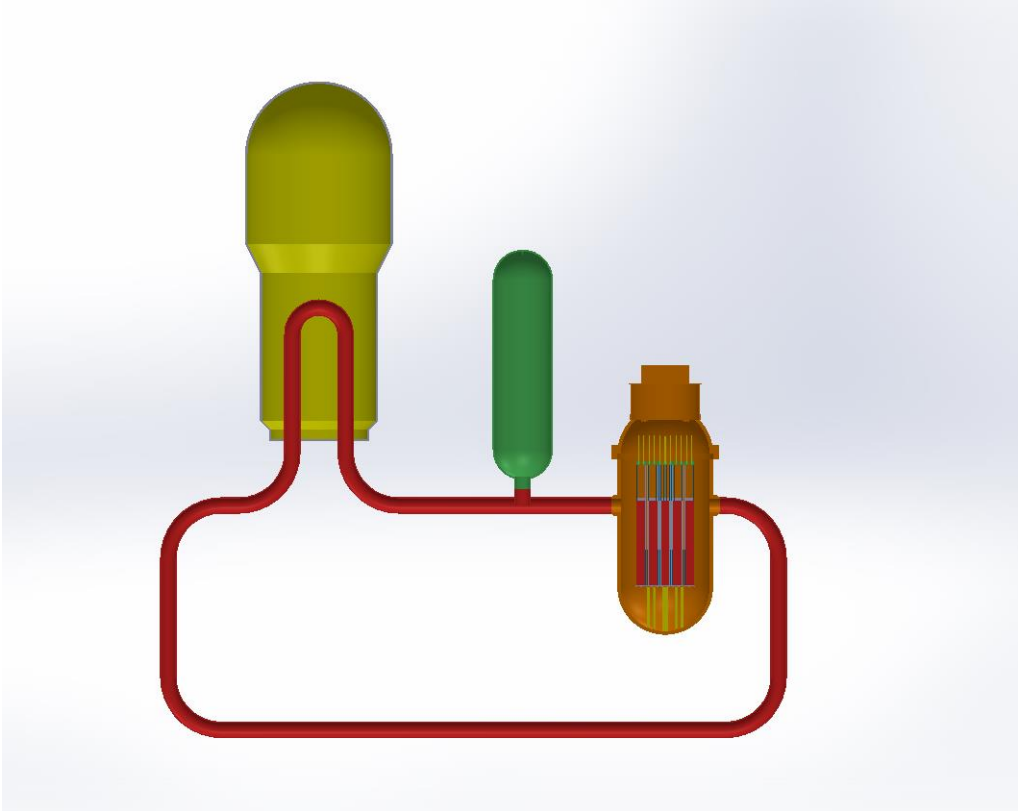

Figure 6 - System rear section view

Figure 7 - Inside of Reactor Vessel and core

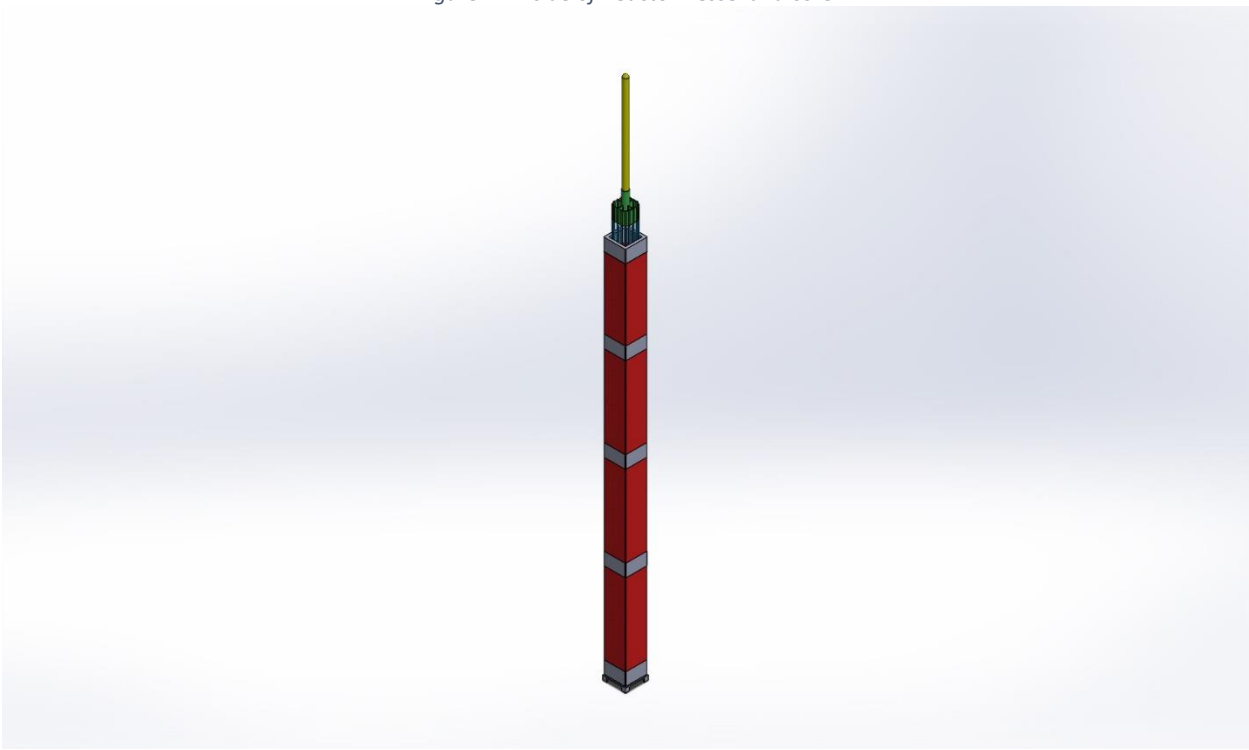

Figure 8- Single fuel assembly and control cluster

Drawings

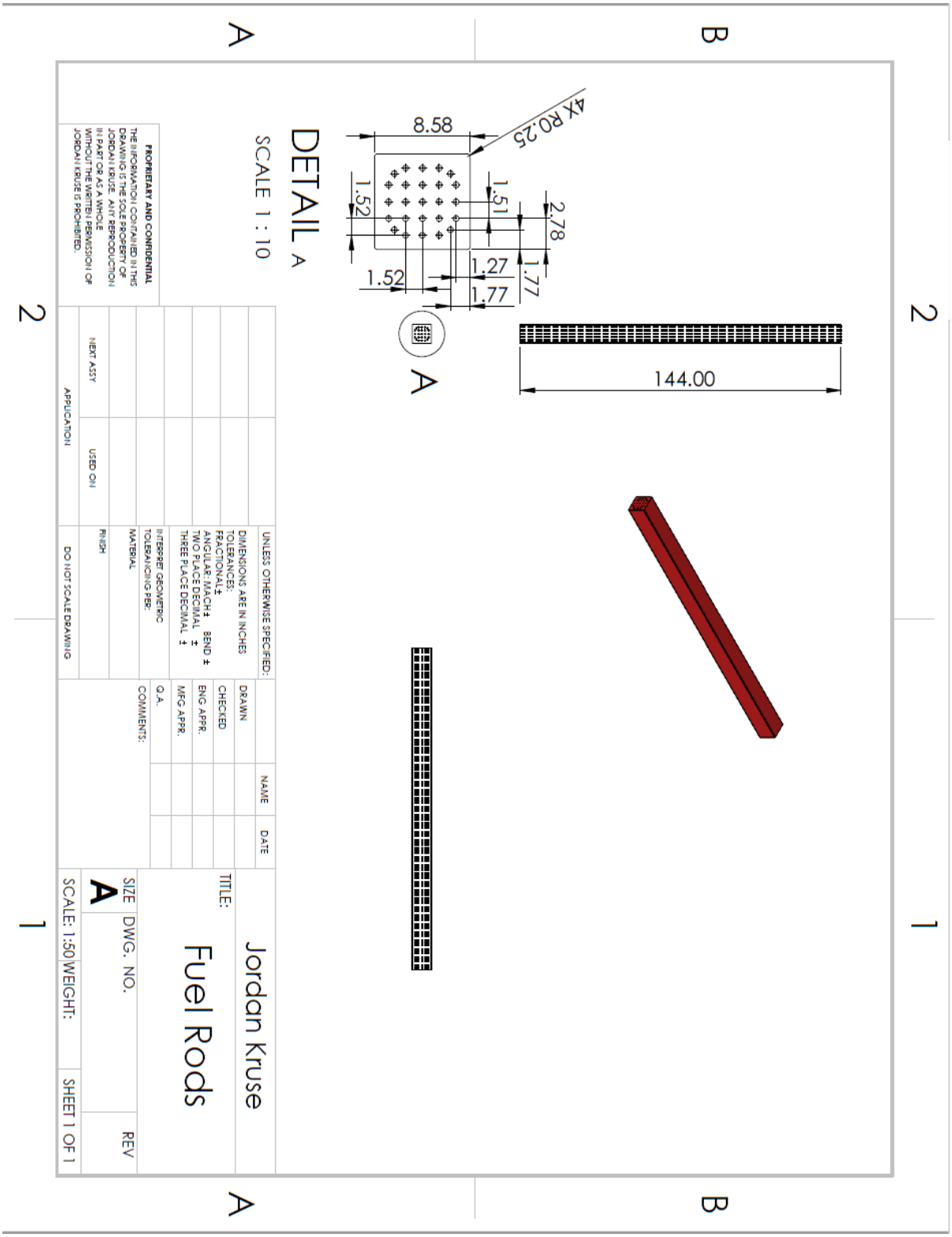
4X R0.25
8.58
1.51
2.78
1.52
1.27
1.77
1.52
1.77
A
144.00
DETAIL A
SCALE 1 : 10
PROPRIETARY AND CONFIDENTIAL
THE INFORMATION CONTAINED IN THIS DRAWING IS THE SOLE PROPERTY OF JORDAN KRUSE. ANY REPRODUCTION IN PART OR AS A WHOLE WITHOUT THE WRITTEN PERMISSION OF JORDAN KRUSE IS PROHIBITED.
NEXT ASSY
USED ON
APPLICATION
UNLESS OTHERWISE SPECIFIED:
DIMENSIONS ARE IN INCHES
TOLERANCES:
FRACTIONAL±
ANGULAR: MACH± BEND ±
TWO PLACE DECIMAL ±
THREE PLACE DECIMAL ±
INTERPRET GEOMETRIC TOLERANCING PER:
MATERIAL
FINISH
DO NOT SCALE DRAWING
NAME
DATE
DRAWN
CHECKED
ENG APPR.
MFG APPR.
Q.A.
COMMENTS:
Jordan Kruse
TITLE:
Fuel Rods
SIZE
DWG. NO.
REV
A
SCALE: 1:50
WEIGHT:
SHEET 1 OF 1

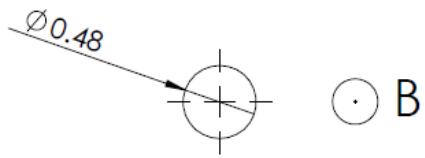

DETAIL B

SCALE 1 : 1

		UNLESS OTHERWISE SPECIFIED:		NAME	DATE
		DIMENSIONS ARE IN INCHES TOLERANCES: FRACTIONAL ± ANGULAR: MACH ± BEND ± TWO PLACE DECIMAL ± THREE PLACE DECIMAL ±	DRAWN		
			CHECKED		
			ENG APPR.		
			MFG APPR.		
		INTERPRET GEOMETRIC TOLERANCING PER:	Q.A.		
		MATERIAL	COMMENTS:		
NEXT ASSY	USED ON	FINISH			
APPLICATION		DO NOT SCALE DRAWING			

PROPRIETARY AND CONFIDENTIAL

THE INFORMATION CONTAINED IN THIS DRAWING IS THE SOLE PROPERTY OF JORDAN KRUSE. ANY REPRODUCTION IN PART OR AS A WHOLE WITHOUT THE WRITTEN PERMISSION OF JORDAN KRUSE IS PROHIBITED.

Jordan Kruse

TITLE: Control Rod

SIZE	DWG. NO.	REV
A		

SCALE: 1:50 WEIGHT: SHEET 1 OF 1

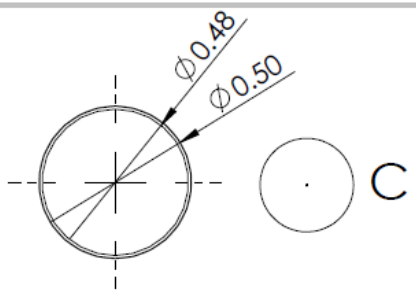

DETAIL C

SCALE 2 : 1

		UNLESS OTHERWISE SPECIFIED:		NAME	DATE
		DIMENSIONS ARE IN INCHES TOLERANCES: FRACTIONAL ± ANGULAR: MACH ± BEND ± TWO PLACE DECIMAL ± THREE PLACE DECIMAL ±	DRAWN		
			CHECKED		
			ENG APPR.		
			MFG APPR.		
		INTERPRET GEOMETRIC TOLERANCING PER:	Q.A.		
		MATERIAL	COMMENTS:		
NEXT ASSY	USED ON	FINISH			
APPLICATION		DO NOT SCALE DRAWING			

Jordan Kruse

TITLE:

Control Rod Cladding

SIZE	DWG. NO.	REV
A		
SCALE: 1:50	WEIGHT:	SHEET 1 OF 1

PROPRIETARY AND CONFIDENTIAL

THE INFORMATION CONTAINED IN THIS DRAWING IS THE SOLE PROPERTY OF JORDAN KRUSE. ANY REPRODUCTION IN PART OR AS A WHOLE WITHOUT THE WRITTEN PERMISSION OF JORDAN KRUSE IS PROHIBITED.

1.00 x 8.50 in

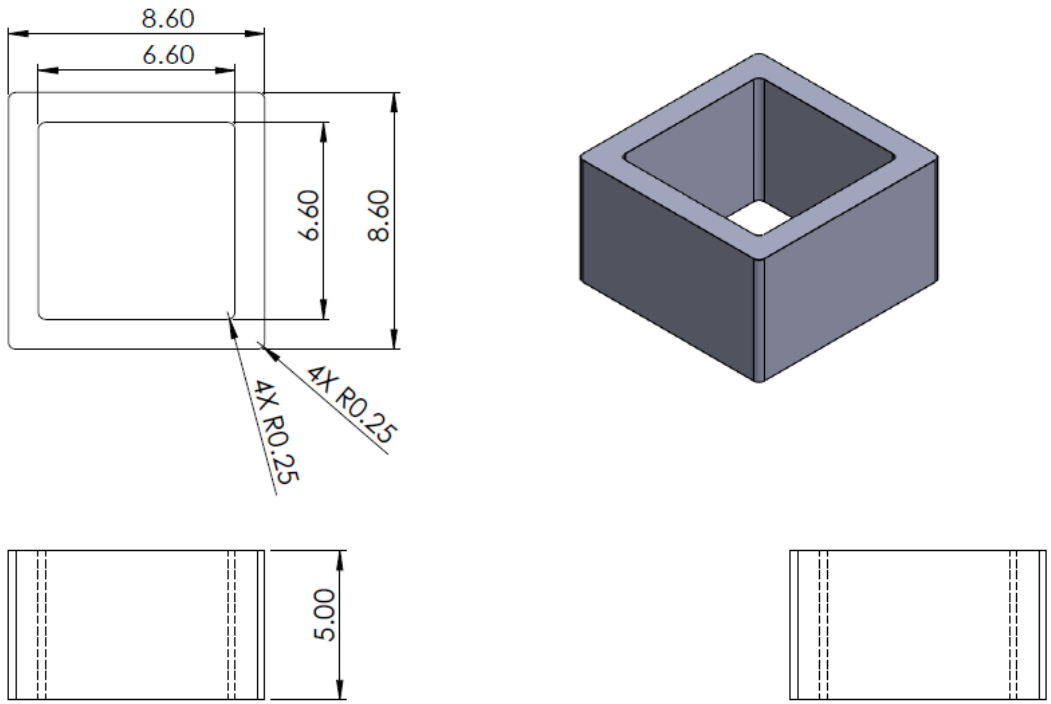

		UNLESS OTHERWISE SPECIFIED:		NAME	DATE
		DIMENSIONS ARE IN INCHES TOLERANCES: FRACTIONAL± ANGULAR: MACH± BEND ± TWO PLACE DECIMAL ± THREE PLACE DECIMAL ±	DRAWN		
			CHECKED		
			ENG APPR.		
			MFG APPR.		
		INTERPRET GEOMETRIC TOLERANCING PER:	Q.A.		
		MATERIAL	COMMENTS:		
NEXT ASSY	USED ON	FINISH			
APPLICATION		DO NOT SCALE DRAWING			

PROPRIETARY AND CONFIDENTIAL

THE INFORMATION CONTAINED IN THIS DRAWING IS THE SOLE PROPERTY OF JORDAN KRUSE. ANY REPRODUCTION IN PART OR AS A WHOLE WITHOUT THE WRITTEN PERMISSION OF JORDAN KRUSE IS PROHIBITED.

Jordan Kruse

TITLE: Top Nozzle

SIZE	DWG. NO.	REV
A	2A	
SCALE: 1:5	WEIGHT:	SHEET 1 OF 1

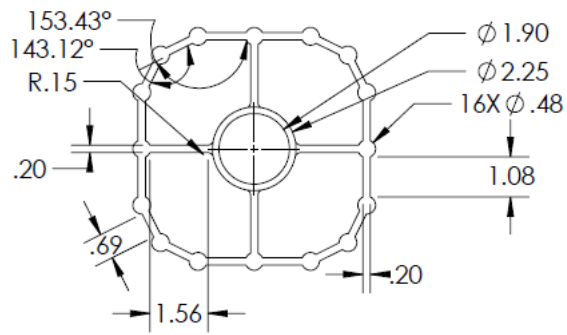

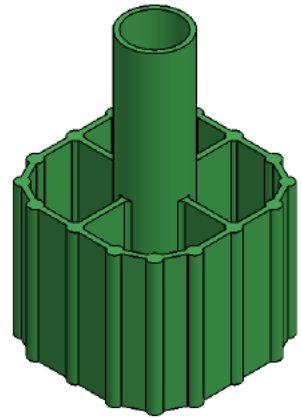

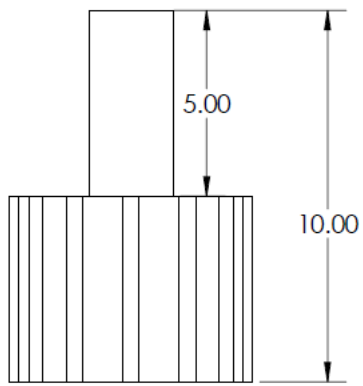

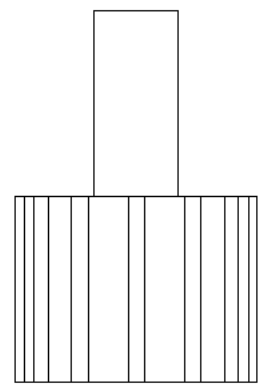

		UNLESS OTHERWISE SPECIFIED:		NAME	DATE
		DIMENSIONS ARE IN INCHES TOLERANCES: FRACTIONAL ± ANGULAR: MACH ± BEND ± TWO PLACE DECIMAL ± THREE PLACE DECIMAL ±	DRAWN		
			CHECKED		
			ENG APPR.		
			MFG APPR.		
		INTERPRET GEOMETRIC TOLERANCING PER:	Q.A.		
		MATERIAL	COMMENTS:		
NEXT ASSY	USED ON	FINISH			
APPLICATION		DO NOT SCALE DRAWING			

Jordan Kruse

TITLE:

Rod Control Cluster

SIZE	DWG. NO.	REV
A	1	
SCALE: 1:4	WEIGHT:	SHEET 1 OF 1

PROPRIETARY AND CONFIDENTIAL

THE INFORMATION CONTAINED IN THIS DRAWING IS THE SOLE PROPERTY OF JORDAN KRUSE. ANY REPRODUCTION IN PART OR AS A WHOLE WITHOUT THE WRITTEN PERMISSION OF JORDAN KRUSE IS PROHIBITED.

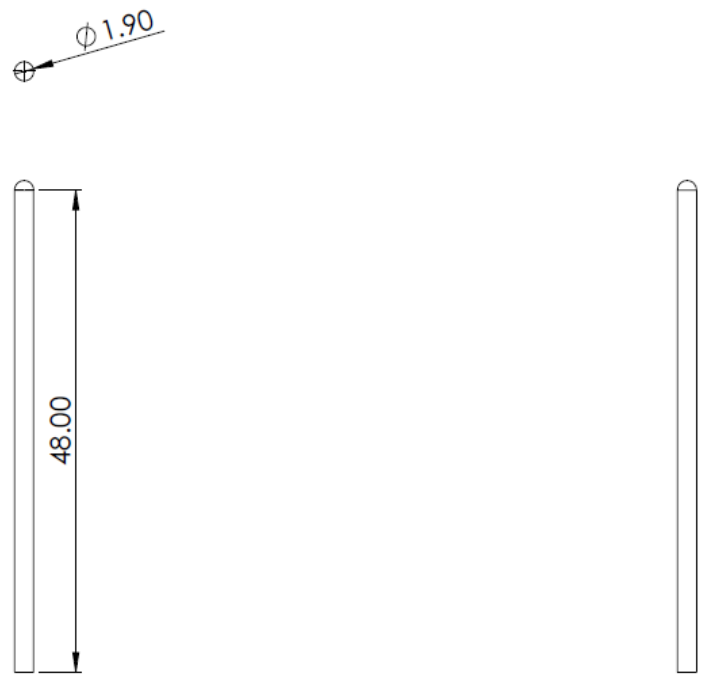

		UNLESS OTHERWISE SPECIFIED:		NAME	DATE
		DIMENSIONS ARE IN INCHES TOLERANCES: FRACTIONAL ± ANGULAR: MACH ± BEND ± TWO PLACE DECIMAL ± THREE PLACE DECIMAL ±	DRAWN		
			CHECKED		
			ENG APPR.		
			MFG APPR.		
		INTERPRET GEOMETRIC TOLERANCING PER:	Q.A.		
		MATERIAL	COMMENTS:		
NEXT ASSY	USED ON	FINISH			
APPLICATION		DO NOT SCALE DRAWING			

PROPRIETARY AND CONFIDENTIAL

THE INFORMATION CONTAINED IN THIS DRAWING IS THE SOLE PROPERTY OF JORDAN KRUSE. ANY REPRODUCTION IN PART OR AS A WHOLE WITHOUT THE WRITTEN PERMISSION OF JORDAN KRUSE IS PROHIBITED.

Jordan Kruse

TITLE:

Control Rod Handle

SIZE	DWG. NO.	REV
A		
SCALE:15	WEIGHT:	SHEET 1 OF 1

ITEM NUMBER	PART	QTY
1	Fuel Rods	1
2	Control Rod Cladding	25
3	Bottom Nozzle	1
4	Control Rods	25
5	Rod Cluster Control	1
6	Support Grid	4
7	Top Nozzle	1
8	Control Rod Handle	1

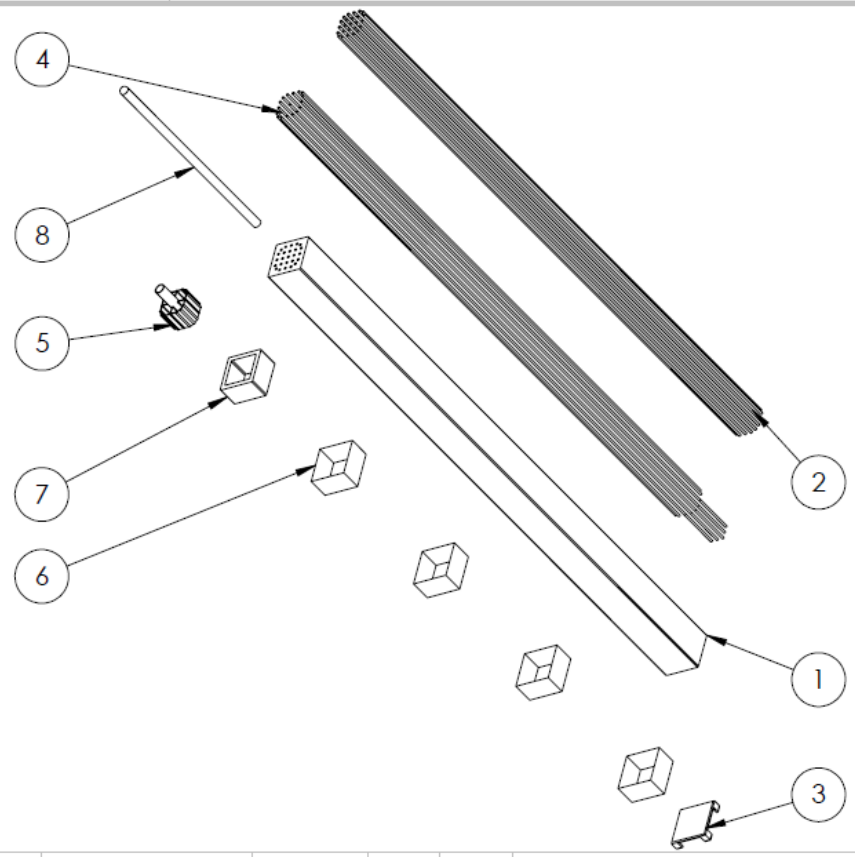

PROPRIETARY AND CONFIDENTIAL

THE INFORMATION CONTAINED IN THIS DRAWING IS THE SOLE PROPERTY OF JORDAN KRUSE. ANY REPRODUCTION IN PART OR AS A WHOLE WITHOUT THE WRITTEN PERMISSION OF JORDAN KRUSE IS PROHIBITED.

NEXT ASSY | USED ON

APPLICATION

UNLESS OTHERWISE SPECIFIED:

DIMENSIONS ARE IN INCHES
TOLERANCES:
FRACTIONAL ±
ANGULAR: MACH ± BEND ±
TWO PLACE DECIMAL ±
THREE PLACE DECIMAL ±

INTERPRET GEOMETRIC TOLERANCING PER:

MATERIAL

FINISH

DO NOT SCALE DRAWING

	NAME	DATE
DRAWN		
CHECKED		
ENG APPR.		
MFG APPR.		
Q.A.		

COMMENTS:

Jordan Kruse

TITLE:

Fuel Assembly

SIZE **A** | DWG. NO. | REV

SCALE: 1:32 | WEIGHT: | SHEET 1 OF 1

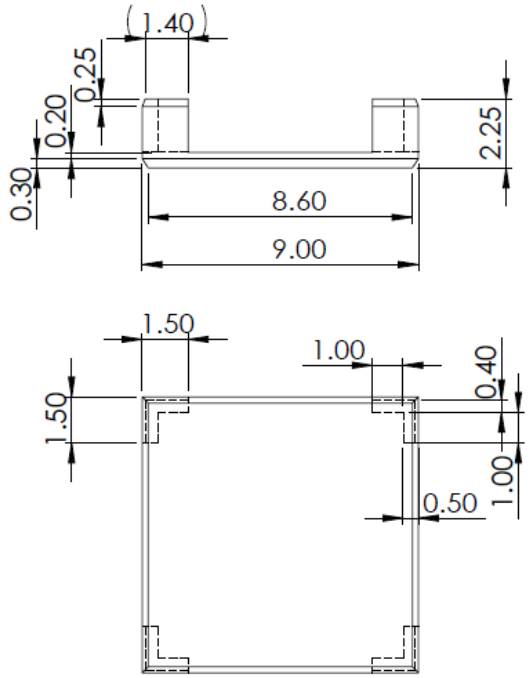

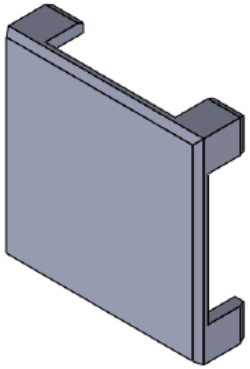

PROPRIETARY AND CONFIDENTIAL

THE INFORMATION CONTAINED IN THIS DRAWING IS THE SOLE PROPERTY OF JORDAN KRUSE. ANY REPRODUCTION IN PART OR AS A WHOLE WITHOUT THE WRITTEN PERMISSION OF JORDAN KRUSE IS PROHIBITED.

NEXT ASSY	USED ON
APPLICATION	

UNLESS OTHERWISE SPECIFIED:

DIMENSIONS ARE IN INCHES
TOLERANCES:
FRACTIONAL ±
ANGULAR: MACH ± BEND ±
TWO PLACE DECIMAL ±
THREE PLACE DECIMAL ±

INTERPRET GEOMETRIC TOLERANCING PER:

MATERIAL

FINISH

DO NOT SCALE DRAWING

	NAME	DATE
DRAWN		
CHECKED		
ENG APPR.		
MFG APPR.		
Q.A.		

COMMENTS:

Jordan Kruse

TITLE:

Bottom Nozzle

SIZE	DWG. NO.	REV
A		

SCALE: 1:5 | WEIGHT: | SHEET 1 OF 1