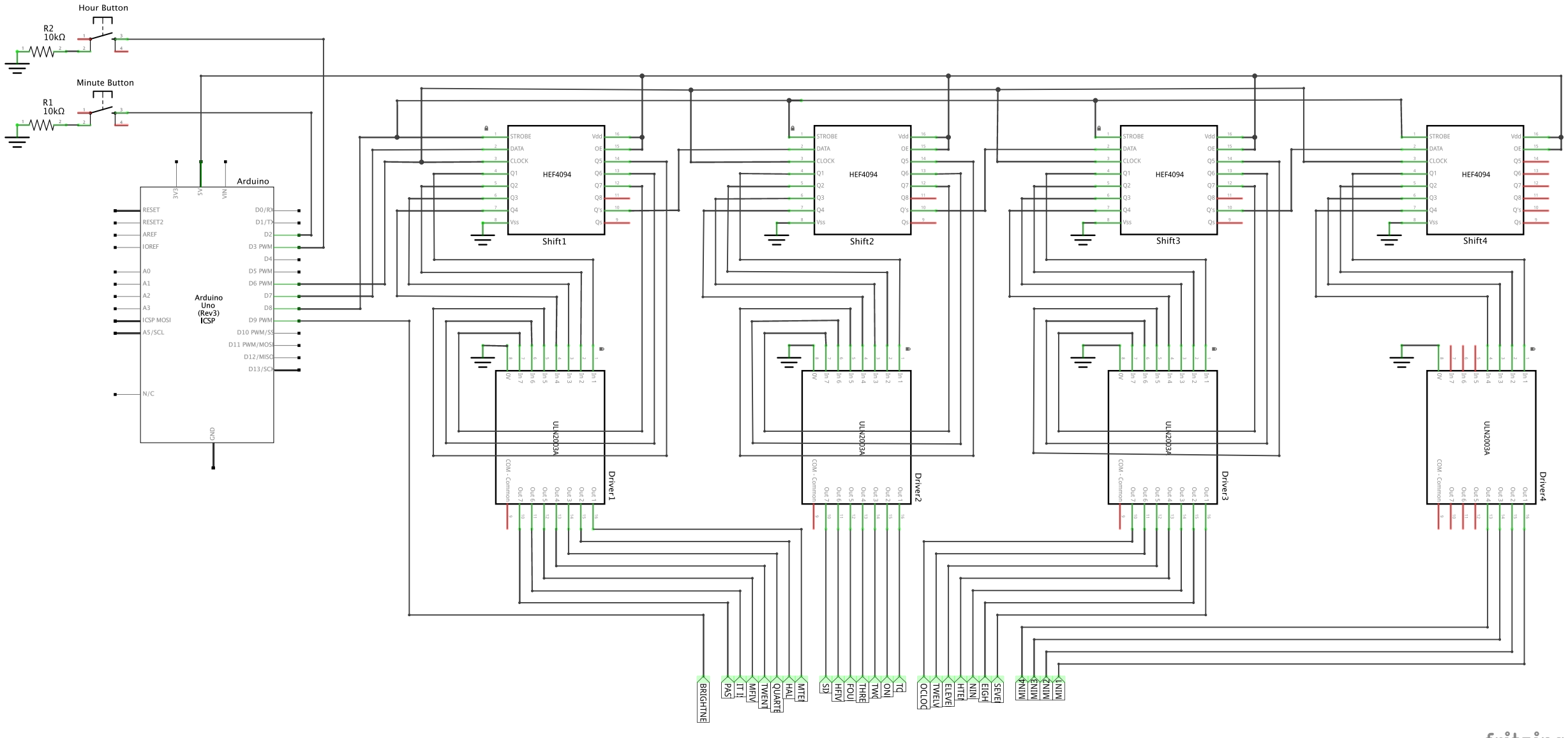
Hour Button
R2
10kΩ
Minute Button
R1
10kΩ
Arduino
Arduino
Uno
(Rev3)
ICSP
RESET
RESET2
AREF
IOREF
A0
A1
A2
A3
ICSP MOSI
A5/SCL
N/C
GND
3V3
5V
VIN
D0/RX
D1/TX
D2
D3 PWM
D4
D5 PWM
D6 PWM
D7
D8
D9 PWM
D10 PWM/SS
D11 PWM/MOSI
D12/MISO
D13/SCK
HEF4094
STROBE
DATA
CLOCK
Q1
Q2
Q3
Q4
Vss
Vdd
OE
Q5
Q6
Q7
Q8
Q's
Qs
Shift1
Shift2
Shift3
Shift4
ULN2003A
0V
In 7
In 6
In 5
In 4
In 3
In 2
In 1
COM - Common
Out 7
Out 6
Out 5
Out 4
Out 3
Out 2
Out 1
Driver1
Driver2
Driver3
Driver4
BRIGHTNE
PAS
IT I
MFIV
TWENT
QUARTE
HAL
MTEN
ST9
HFIV
FOU
THRE
TWO
ONI
TO
OCLOC
TWELV
ELEVE
HTEN
NINI
EIGH
SEVE
FINIW
ENIW
TNIW
ONIW