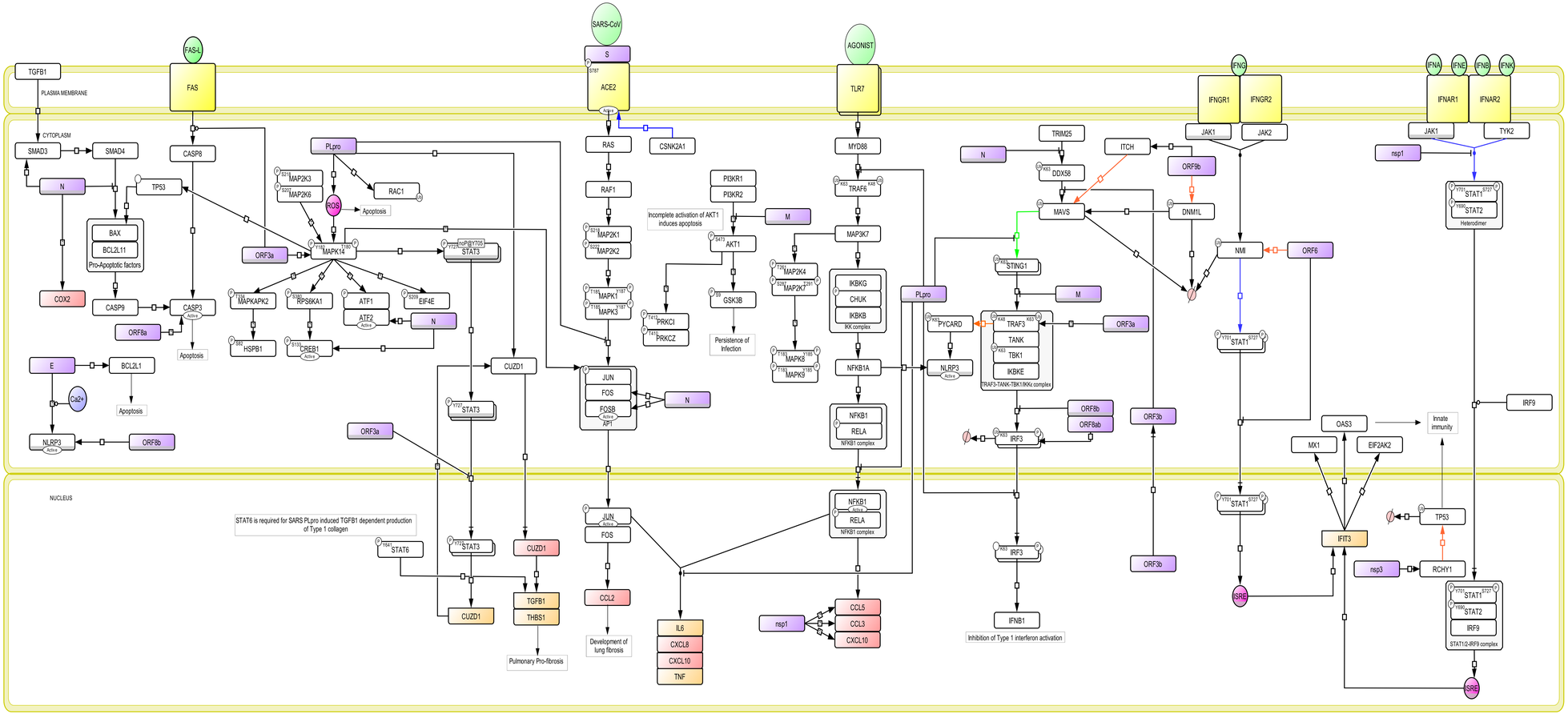
PLASMA MEMBRANE
CYTOPLASM
NUCLEUS
TGFB1
FAS-L
FAS
SARS-CoV
S
ACE2
AGONIST
TLR7
IFNG
IFNGR1
IFNGR2
IFNA
IFNE
IFNB
IFNK
IFNAR1
IFNAR2
JAK1
JAK2
TYK2
SMAD3
SMAD4
CASP8
N
TP53
BAX
BCL2L11
Pro-Apoptotic factors
COX2
CASP9
CASP3
Active
ORF8a
Apoptosis
E
BCL2L1
Ca2+
NLRP3
ORF8b
PLpro
MAP2K3
MAP2K6
ROS
RAC1
MAPK14
ORF3a
DoP@Y705
STAT3
MAPKAPK2
RPS6KA1
ATF1
EIF4E
ATF2
HSPB1
CREB1
CUZD1
STAT6
TGFB1
THBS1
Pulmonary Pro-fibrosis
RAS
RAF1
CSNK2A1
MAP2K1
MAP2K2
MAPK1
MAPK3
JUN
FOS
FOSB
AP1
CCL2
Development of lung fibrosis
IL6
CXCL8
CXCL10
TNF
PI3KR1
PI3KR2
M
Incomplete activation of AKT1 induces apoptosis
AKT1
GSK3B
PRKCI
PRKCZ
Persistence of Infection
MYD88
TRAF6
MAP3K7
IKBKG
CHUK
IKBKB
IKK complex
NFKB1A
NFKB1
RELA
NFKB1 complex
MAP2K4
MAP2K7
MAPK8
MAPK9
nsp1
CCL5
CCL3
CXCL10
TRIM25
DDX58
MAVS
ITCH
DNM1L
STING1
PYCARD
NLRP3
TRAF3
TANK
TBK1
IKBKE
TRAF3-TANK-TBK1/IKKε complex
IRF3
IFNB1
Inhibition of Type 1 interferon activation
ORF3b
NMI
ORF6
STAT1
STAT2
Heterodimer
IRF9
STAT1/2-IRF9 complex
ISRE
OAS3
MX1
EIF2AK2
IFIT3
Innate immunity
TP53
RCHY1

Legend

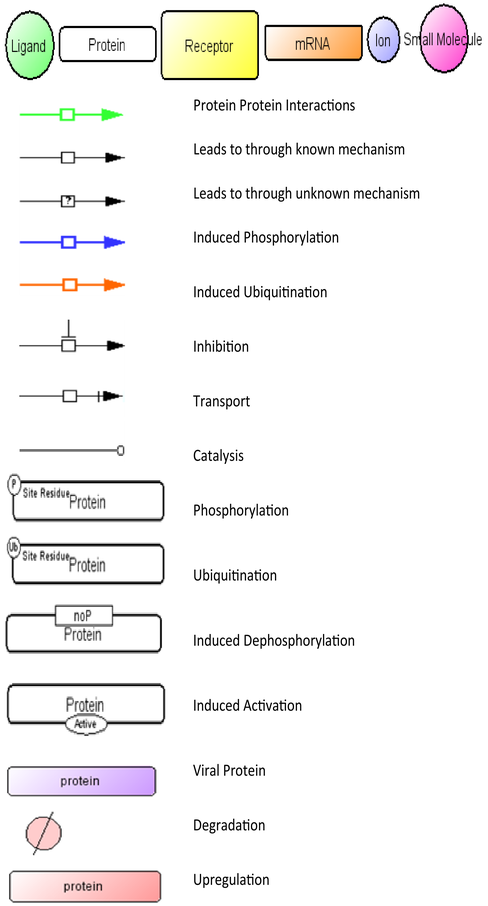
Ligand
Protein
Receptor
mRNA
Ion
Small Molecule
Protein Protein Interactions
Leads to through known mechanism
Leads to through unknown mechanism
Induced Phosphorylation
Induced Ubiquitination
Inhibition
Transport
Catalysis
Site Residue
Phosphorylation
Ubiquitination
noP
Induced Dephosphorylation
Induced Activation
Viral Protein
Degradation
Upregulation