5 Magnetic field control

The magnetic field control system consists of the magnetic shield, the set of shim coils, and the internal and external magnetometers. Together, these components allow for interaction region operation with low levels of ambient magnetic background present. This section will discuss the design requirements of the system, present the physical details of its implementation, as well as the performance achieved with the present shielding system.

While the design, building, and characterization of the shield can be done in a straightforward manner by emulating past work, the underlying science is frequently not obvious and is often left out of the literature on the topic. This is understandable, since understanding how the shield works is rarely of interest to the experimentalist desirous of getting an atomic or molecular beam operational. In what follows, I will also have to leave several lines of exploration unfinished as they are not immediately required in order to proceed with the CENTREX experiment. However, it may be a starting point for future work requiring higher performance.

5.1 Design requirements

5.2 Theory and related work

5.3 Physical structure

The magnetic shield consists of four concentric cylindrical layers with open ends (See Figs. 17 and 18). Three of these are built by wrapping metglas foil around PVC pipes, while the fourth, innermost layer has been welded out of two sheets of mu-metal rolled into a tubular form, and annealed. The mu-metal tube, being 1 mm thick, is relatively fragile; in order to limit its motion, it is sandwiched between the hard plastic PVC tubes of the inner metglas layer and that of the shim coils. The inner two metglas layers are spaced apart using small-diameter PVC tubing; the same method is employed to suspend the glass vacuum chamber of the interaction region centered inside the shim coils tube. The outermost tube is mounted on an 80/20 frame using a set of seven aluminum semi-circular plates.

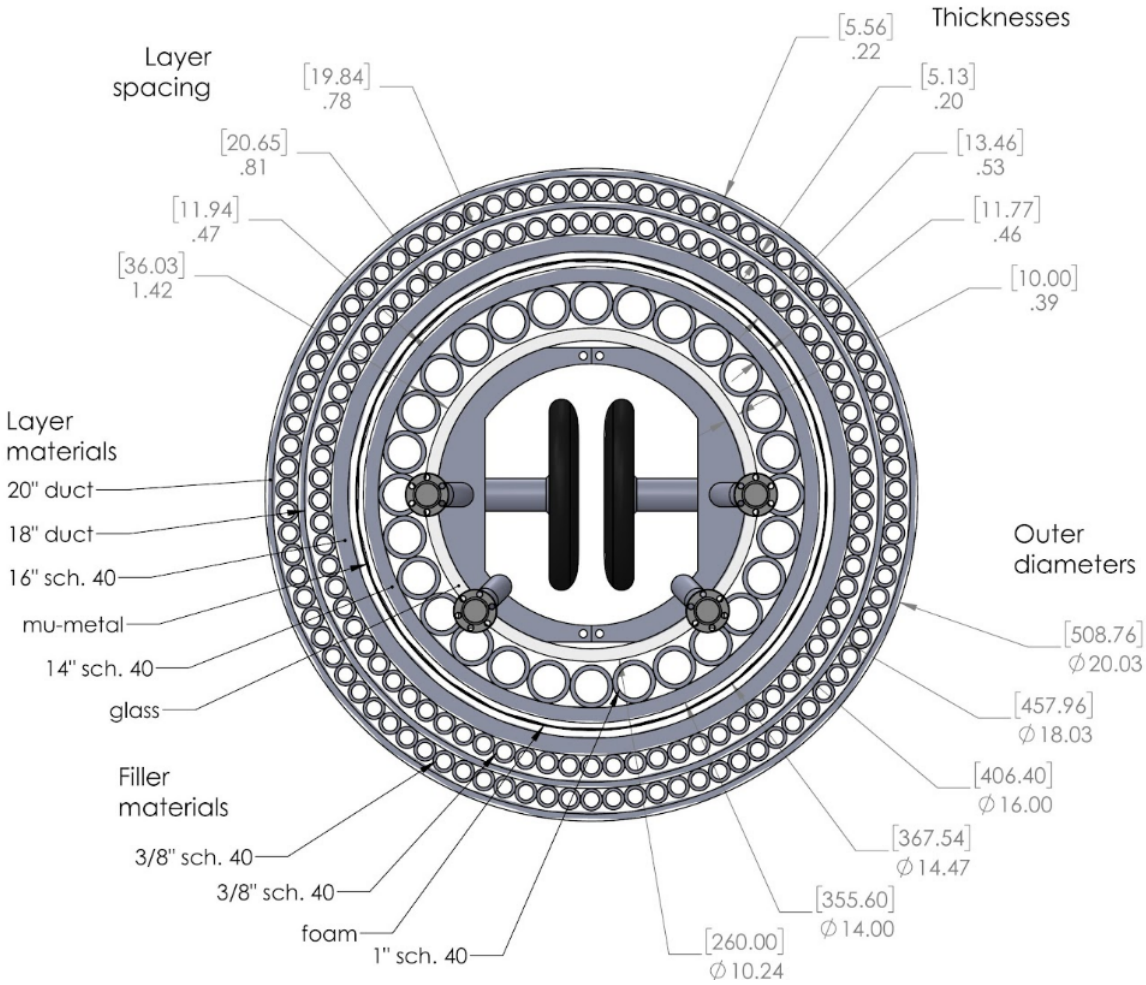

Figure 17: Cross-sectional view of the magnetic shield.

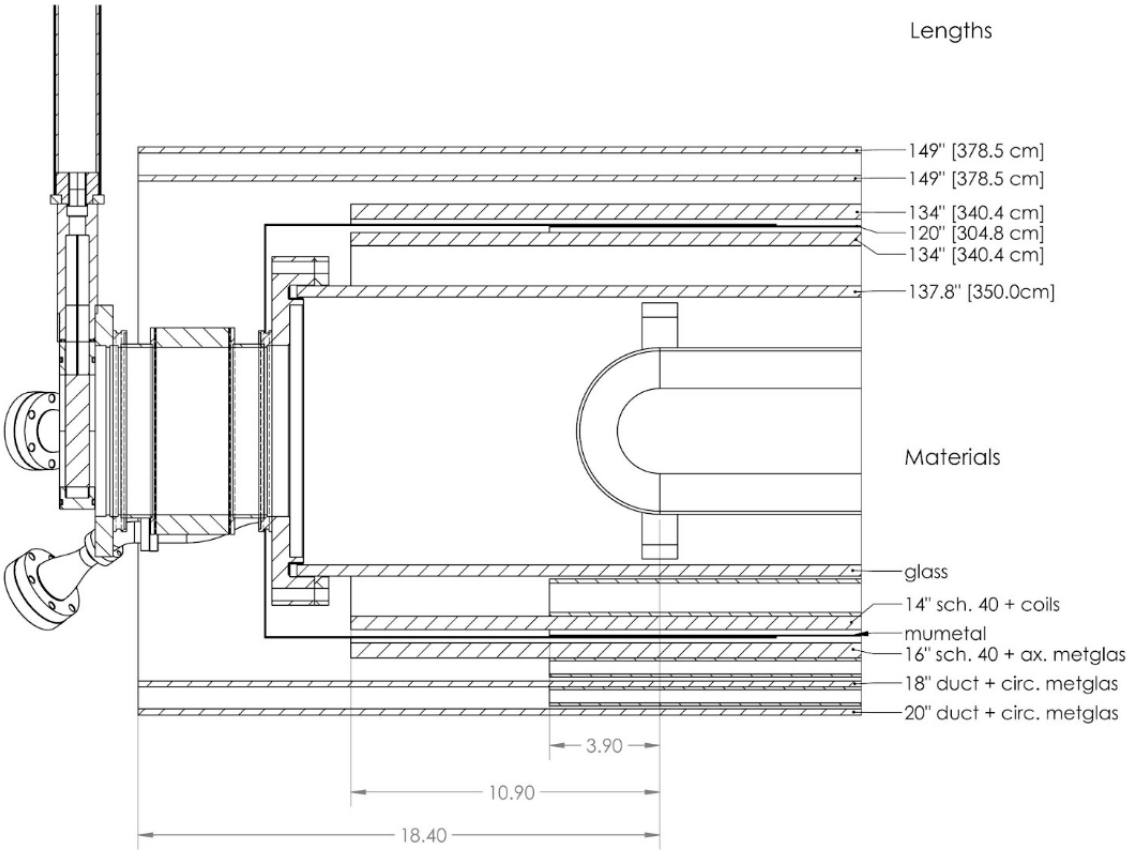

Figure 18: Longitudinal cross-section of the magnetic shield, showing the unequal lengths of the layers.

Table V: The four layers of the magnetic shield.

Layer	Length [in]	Weight [lbs]
Main layers:		
20” duct	149	100
18” duct	149	80
16” sch. 40	134	180
14” sch. 40	134	140
Spacers:		
3/8” sch. 40	120*	190
1” sch. 40	120*	90

Layers, spacers, mounting The three metglas layers are all built in the same way. First, the plastic tube (provided by the Harrison Machine & Plastic Corp., Garrettsville, OH) is cut to size with a handsaw if necessary (see Table V for layer lengths and material details) and roughly cleaned with water and paper towels on the outside and, as far as possible, also on the inside to remove the dirt it comes with, probably due to outdoors storage. Then, I cut 8×12 pieces of metglas (7×12 for the 16” layer) to the length required to wrap around the tube with approx. 1” of overlap. The pieces are secured to the PVC tube and to each other with a few short pieces of Kapton tape (McMaster p.n. 7648A63) so that they do not fall down during assembly.

The prepared and cleaned tubes are put on a stand with wheels under them so they can be rotated, facilitating the circumferential wrapping of the metglas foil. The first piece of tape is wrapped about an inch from the end of the tube; leaving this much bare PVC helps with handling the approx. 100–200 lb tubes. The second piece is wrapped so as to have about an inch of overlap with the first, and the remaining six pieces are attached analogously. Once the first layer is done, the wrapping resumes at the position of the first metglas piece. This procedure is repeated for a total of 12 layers total. (Due to axial and circumferential overlaps, the true thickness of the shield is not perfectly homogeneous, but in practice we find that this is unimportant as long as the overall shielding is sufficiently high.)

To secure the metglas pieces and prevent them from coming loose in case the Kapton tape fails, the entire tube is wrapped in plastic foil. Following that, there are 12 turns of

degaussing wire wrapped in a toroidal fashion around the tube. The wire is 22 or 24 gauge lacquered copper wire, sufficiently thick for approx. 2 amps of degaussing current. The 12 turns are uniformly distributed around the circumference of the tube; we believe this may be important for the performance of the degaussing. On the outermost (20") tube only, we also have a solenoidal coil with approx 1 turn per in spacing for rough cancellation of axial fields. (Given the metglas wrapping geometry, this solenoidal coil would not be effective for degaussing.) Finally, each tube is again wrapped in plastic wrap to secure the degaussing and (for 20" tube only) the solenoidal coil.

The mu-metal layer does not, of course, require wrapping with metglas, only the degaussing coil and the outer plastic foil wrap. However, care must be taken to reinforce the insulation of the degaussing wire at the ends of the cylinder; the sharp edges can easily strip the magnet wire coating and short the turns of the wire to the conductive cylinder, which does not happen with the PVC tubes. I used heat shrink tubing to do this, but it required cutting the wire at each turn and at both ends, adding insulation, soldering the wires back together and heating the insulation to make it shrink and adhere. It would have been better to use a wire with more durable insulation instead.

Shim coils The set of shim coils consists of 16 segments of three dimensions each (see Fig. 19). The two transverse dimensions (B_x and B_y) are implemented as pairs of one-loop saddle coils (8" by 60°each), while the axial field is controlled by simple circular current loops (spaced 8" apart from each other). This gives a total of $5 \times 16 = 80$ degrees of freedom. The 22g magnet wires are fixed in place by being glued into a series of grooves on the surface of the 14" PVC tube using neutral-cure RTV silicone sealant (Dow Dowsil 737) and wrapped in plastic foil for added protection. During the curing of the silicone, the wires are held in place by Kapton tape, which is removed after the silicone hardens.

The size of the tube makes it impractical to use standard milling machines. While the circular grooves can easily be cut using a hand saw, the axial ones were done on a custom-made setup (Fig. 20) involving a hand drill clamped on a 80/20 frame, which in turn is mounted using linear bearings to a larger frame. The setup is not as rigid as a true milling machine would be, which is why it is important to use a constant force while moving the

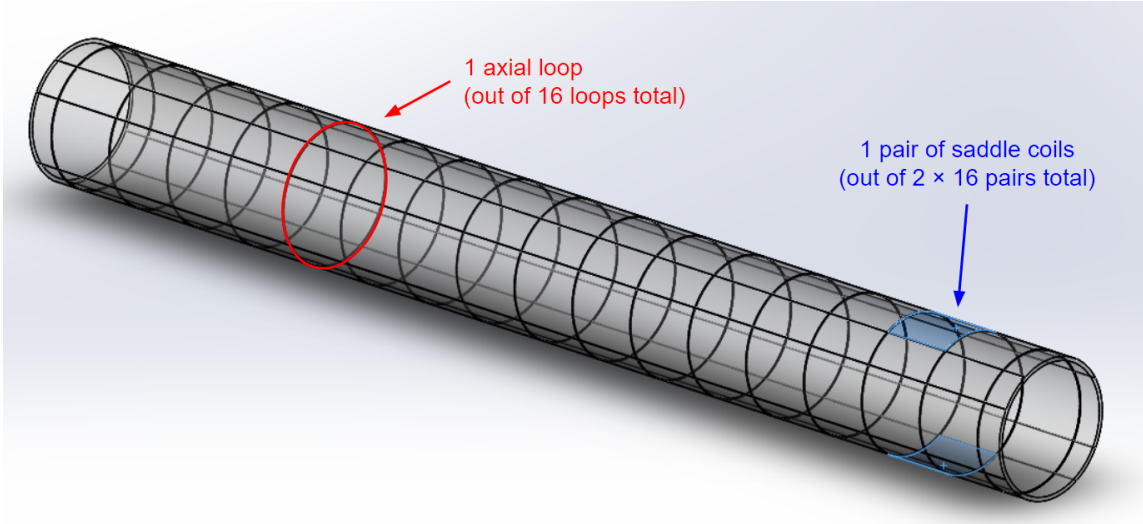

Figure 19: Shim coil geometry.

carriage forward to avoid cutting wavy grooves. I used a system of ropes, pulleys, and weights to achieve satisfactory results.

With 80 different pair of wires (twisted into twisted pairs using a hand drill), cable management is essential so as not to confuse the cables with each other. For each coil, a linear groove is cut from one end of the tube to the location of the coil; thus all coils can be connected to at one end of the shield. There, the sets of wire pairs belonging to each dimension are bundled together into five bundles of 16 pairs using zip ties; each wire pair is temporarily labelled by a numbered piece of Kapton tape at the end. For ease of connecting and disconnecting, these wires are attached to adapter boards that are permanently attached to the 80/20 support frame of the shield. The adaptor boards bundle four pairs of wires into one RJ45 jack to enable using standard patch cables for ease of connection.

Support structure The considerable total weight of the magnetic shield (780 lbs of plastic, plus metglas, mu-metal, and other materials) requires a sufficiently strong support structure. In our case, it is assembled from 80/20 rails (profile number 3030) and placed on eight caster wheels McM p.n. 9813T71) so the setup can in principle be moved by one person. The support structure consists of three four-foot segments mounted together to form a rectangular box. Rails going across the top of the box hold aluminum plates (1/4" thick) with semi-circular cutouts. To keep the plates from damaging the delicate outer

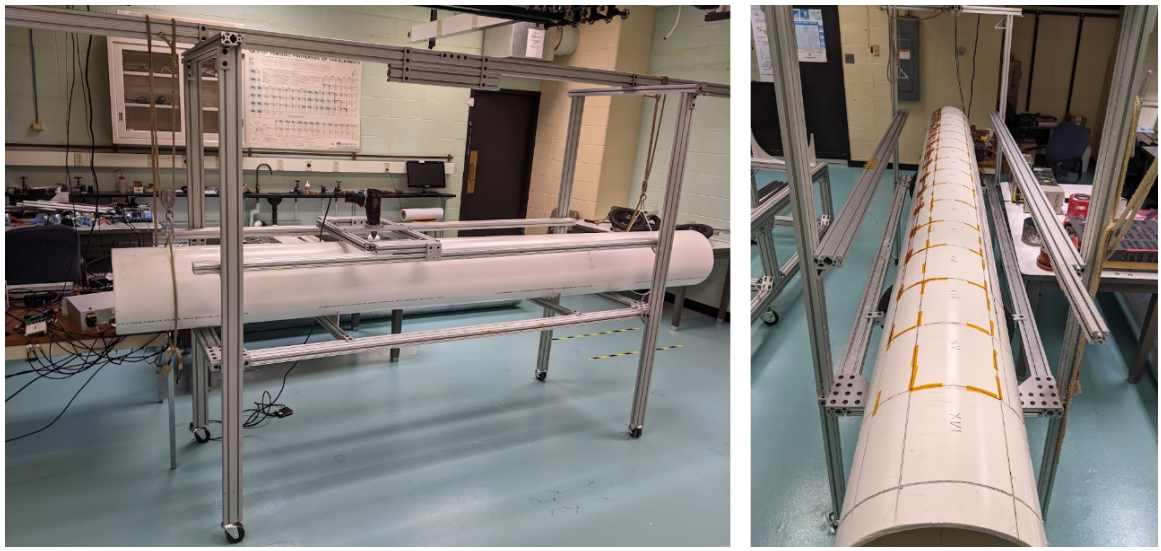

Figure 20: ***a.*** Milling machine for cutting longitudinal grooves. ***b.*** Wires taped inside grooves while silicone hardens.

metglas layer, the sharp corners of the cutouts are protected with hard nylon tape.

5.4 Operation and measurements

The characterization and use of the shield is an iterative process requiring a repeated sequence of three operations: magnetic field measurement, degaussing, and shimming.

I distinguish two types of measurement of the magnetic field of interest to us. Residual field is the field inside the shield assuming no changes in the external magnetic conditions. In our four-layer shield, this is the dominant magnetic field inside the interaction region and it is driven primarily by the interaction between the magnetization of the ferromagnetic shield layers with the external magnetic field. Despite our best attempts at degaussing, these residual fields are typically of the order of 50–200 μG in the center of the shield.

Field measurement During shield characterization, the primary measurement is of the field in the central region of the shield. During the use of the shield in a beam-line experiment, this region is difficult to access; it is also the region of greatest interest since all molecules included in the experiment pass through it. During characterization I attached a 4" $\times$ 4" aluminium rectangular tube by suspending it from them shield mounting structure at each end. I used a system of pulleys to pull the sensor carriage using a stepper motor and

a rotary encoder to measure the position of the sensor along the length of tube. The sensor itself (Bartington Mag03MS-100) is a 3-channel fluxgate magnetometer with a measuring range of 1 G and a typical electronic offset of several hundred microgauss. (The specified noise level of 0.1 μG/$\sqrt{\text{Hz}}$ at 1 Hz, integrated over the 3 kHz bandwidth of the sensor, is below the mechanical stability of the sensor translation setup with a typical repeatability of approx 2 μG.)

The electronic offset of the sensor and its associated electronics is significant. It is specified as 50 μG, with a temperature coefficient of 1 μG/°C, although in practice offsets of several hundred microgauss are typical. The offset calibration is done by taking a measurement and immediately repeating it with the sensor rotated upside down. This is accomplished by mounting the sensor in a short rectangular aluminum tube with enough plastic tape on the outside so that the sensor carriage fits tightly inside the long square tube going through the center of the shield. After a measurement is done, the sensor is pulled out of the long tube and reinserted rotated upside down. The accuracy of the offset calibration then depends on how well-centered the sensor is in the carriage, how much the field inside the shield changes during the time it takes to perform the calibration, how much the electronic offset itself changes in the same time, and how perfectly square the cross-sections of the long tube and the carriage are.

Rather than attempt to estimate the magnitudes of these effects individually, I estimate the precision/accuracy of the calibration from the calibration curve itself; see Fig. 21 for a typical example. It shows the two transverse components of the magnetic field (B_x and B_y) as measured by the sensor in its normal orientation, as well as with the sensor inverted. The data is presented ae in the symmetrized form: tiormal+inverted)/21- which corresponds to the se11s or offset, and (normal-inverted)/2, which corresponds to the physical magnetic field plus any calibration imperfections. Given the tim scaleof the changes in the electronic offset is primarily driven by temperature changes, which are negligiblein the time it takes to do the calibration (around 2 min), we expect the curves showing the offset to be perectly flat within the noise of the measurement, but that is typically not the case. Therms deviations from the averagevalue I identify as the error in the offset calibration, cosisting of all the aforementi m ed fact rs.

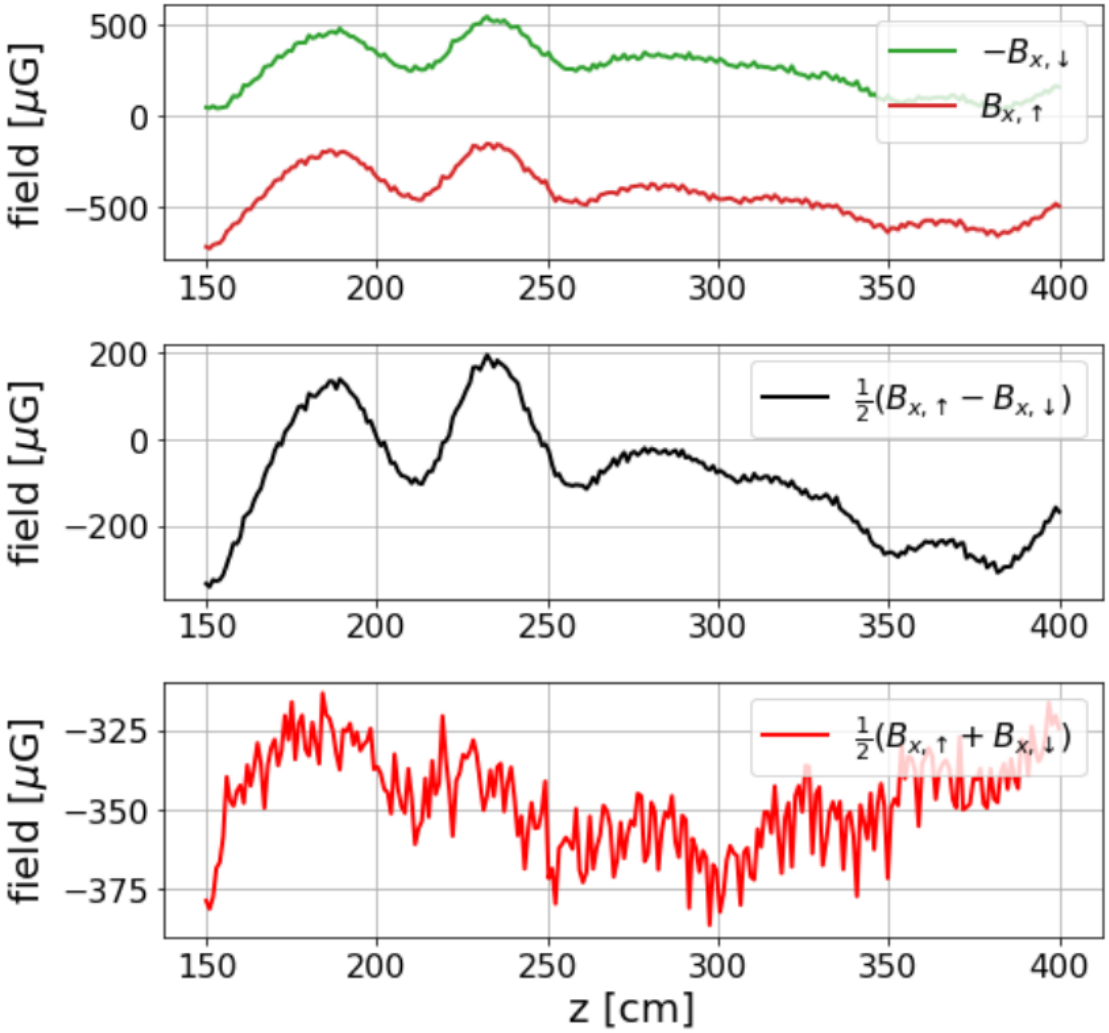

Figure 21: Electronic offset of the magnetometer as a function of position along the length of the center of the magnetic shield. Only the two transverse dimensions are shown.

While one may take the(normal-inverted)/2 superposition s the best measurement of the physicL fields, doing so means that tne error is different at each location along the shield. Since we expect the offset to be essentially constant during the calibratino, I believe it w a better practice to estimate theoffset from the averagevalue .of the+ superposition, and then simply -subtra.ct this co stant value from all subsequelt measu.ramets. This way, the overall offset is subject to a +/- XX uG uncertainty (typ.), bu the shape of the field pattern is known much more precisely.The typical repeatability of a measurement is within M

In addition to the ra dom errors i .duced oy the iJ,echa. 1.cal °”’’., , ,..,..d.,(>.., J inatabil ty of th.e measuremen.t setup we have to pay Jte i”tr’onto the’ sys tematic errors induced by thesignal chain from the sensor onwards. The sensor a,1d the preamp have a limited bandwidth; 3 kHz for the se sor, and a settable low-pass filter for the preamp (between 0.1, 1, 10, 100, XL Hz). Thia must not be set too low in relation to the speed of the sensor motion. In practice, I use the lowest...reasonable LPP cutqff freq., verifying my choice by repeating the mea s ur eme flt with the nex t higher avai l ab1’e freaue,cy:.. If the two me a s ur eme nt are s uf f i c i e nt l y close to each oth er , I use the lower of the two f’reqs. use a similar process to decide upon the d1gital LPF inherent to theADC (ADxx,xx.. used in a hoxoo bui ot ADC board)

Dynamic field measurement On the other hand, the atte uat i on of t he ex ter ,a l :(iel d s i s ,+-1;,Q 11ot p e rf ec t . If an infinitely l a.rge He lm h ol z pa ir we r e to drive a perf ect l y unif orm..and s i usoidally varyi ng ma g n e t i c field in the region of space occupied by the magnetic shi el d , t h en a smaller sinusoidal var iat i on of t hef i el d inside the sni eld could be det ect ed that is of the same freque cy as the e.;Ct e r 11a l field. In practice, there are practical limits to the size of exter al coils. In one vre s i on of’ t hemea s ur eme n t , I have attached a room-sized loop of wire to t he walls of the lab and dri ve11 them witha function generator while eo N pavsing the ma g ne t omet er re ding through a lock-in amplifier. Re pe a t i ng t h e mea s ur e me n t irn the a absence of any shielding gi ves the mag itude of t ne external field¥ variation. Di v i d i ng t h i s by the mag itude measured with the sni el d in place gives the shieicting factor. SeeFig. XXX for seve al variations of this measurement for va ni ous s hi el d i g c onf i gur at i ons.. C

Thedsadvatage of this method is that the magnetic shi el d has to be removed f to dete rmi ne the ex t e r na l ma g net i c field, since the shape of the exteral coils is difficult to easure preci sel y. To find theSF o the final shield, I have used smaller rectagular coils of well-known dime nsi ons cent e r e d around the mag ne t i c s hi el d ; the field they apply, while not uni f orm„ cau be calculated using a closect-f orm expression (see eqn)(XX. in pa per YYY). See Fig. XXX for details about EJ,e recta gular coilo-Z:: om <r t ry . The results of the meqsurements in this configuration are discussed insect:performance.

Degaussing Degaussing is a method of reducing the residual field inside a magnetic shield baaed on the following observet.ion:the field inside a hollow cyl1nder made of a ferromagnetic IDB.terial,when placed in a region of a given external field, can be greatly reduced by driving asinusoidal magnetic field with a gradually decreasing e ,velope.see.Fig. XA for an-example of the degaussj..ng.. g ometry,w a v.e :lorm, ard the result improvement in the shielding.

The hardware used...for degaussing in this experiment is as follow.s Each of bhe four shlelding ayers H has its own 12 - turn degaussingcoil. These are connected to a PCB with a set of relays that can connect each of them to the degaussing current, but only one at a t e. During degaussing,the outer ' ayer isalways cormectetl- first,followed by the secorx:l outennost layer ollowed by the innermost metglas layer, iollowed by the mu-metallayer. i3ce the residual field is primarily determined by the innemost layer, that one is degaussedlast lest it be magnetized by accident duri g the degaussing of the other layers. The relays PCB is in turn co nnected to an isolation transformer for the purpos,e of DC blocking We have considered alter nate forms of DC blocking, iuch as a capacitor e11-R-J., but the requ ired capacitance a± -aQ88":iei –a ae 1 was too high at the low frequetlcies typica.llyusedin degaussing (down to 1 Hz). The transformer is driven by a power amplifier,Kepco BOP36-12M), which in turn is driven by a home-built DjC boa.rd. S ee Fig. XXX.. for a schema.tic of the degaussing wirig connections.

A wide rage of degaussing waveforms have been used in the literature for exampee, li ar or polyllomial enveloves ref. XU) or envelopes ' specifically optimized for a linear decrease in themagnetization?) of the ferromagnetic material. In this experiment, I use a finite umber of

a.a s inusoidaldegaussil18 pulses. The puls s can Optionally be separated by and adjustable delay to probe tfie evolution of the residual field from pulse to pulse. Each subsequent pulse has its amplitude decreased by a constant factor comared.with the preceding pulse; thus our protocolw ia similar to, but identical, using an exponentially decreasing e velope multiplyig a sine wave as used in refai XXX and YYY, as well as the ACME ex eriment ref. ZZZ) .Pig. XXX identifies the parameters of the dega ssing waveform graphically

Despite spedi1g aig„ificant amounts of time o optimizi g the degaussing parameters, I am only able toe claim the following. tega.ussing freque(1Cy ha.s to be slow enough that the skin effect does not significantlyaffe ct the degaussi11g1; the initial amplitude has to be large enough to drive the shield i 1to saturation; the -final amp. has to-b e-small enough that tne shieI -has recovered from saturation and is circlin-g near a point around the origi of the hysteresiscurve; the number of degaussing pulses has to be large e ou enough so that the decrease in amplitu is gradual.;'.l'.he exact values of the parameters metioned f n tae prece'1ing ta'tements need to be found experimnet lly for the shield geometry used; seJ-Fig. for the data correspondi to my optimizationattempts. The final jtalues of he degaussnig parameters used are also specified in:hat/ figure; these are not necessarily optimal, but the procedure works well enough for our purpose.

Exp1-.ora tion of these paramters is further comp ic ?.ted by he fact that there are four layers to deg,uss, ard degaussing one moy inadv erted ty m gnetize the others-. I have tried degaussing sevral or all layers in p:rallel, but have not found any s ignific nt improv mer:it and ti:ius h ve not further explored that method., However, while building the indivictual metglas layers, I have measured the magne izationof each layer before a nd after degaussing; see Fig. X.U for this data.

Given the 1'lportance of the long-tenn sta.bility of the mag ot . le field inside the shield, it is interestilg to explore how stable th degaussing process is, i.e., how much does the field change when degaussing., repeatedly, or MW- what happens when the field has driftedaway from the oeg,ussedvalue and the shieldis degeusae.d again. (Make a figure with the answer to this question.) The inter ctiofl of degaussing with the shimming coils is explored in the.followgi section.1

Shimming coils Once the shield has been degaussde as well as is possible, the rema.iic.g magnetic field has to be Ca.llcelled using the systern of shim coils. The accuracy of this depends on the measuremer t of the residual field,- as well as on the coils themselves. Duri1 shield characterization, we have access to the center of the shield, and can mea.s ure hte fields t within 1.:-2 uG. These can be shimmed away to withinX uGrms; the limit is set by the1umber of coil segments and their size.

The shimmmng process consists of t o steps. First, the individual fitld patterns generated by each of the 80 shim coils have to be measurceti. I do this by Jllowing a constant current thr@ugh thecoil under test, measuring t the magnetic field, then reversing the direction of the current ard re pec¢ing the measurement. By subtracting the .two measuremnets.,applyi1g smoothing (usingsavglofilterl(l., XX , ll)), andlf masking the parts of the curve where the coilfiela is expected o-4– be egligible(see Fig. XXX.for an exampee of thecalibration curve). Once the calibration curves for all the coils are known, I, usea simple least-squares mi:1imization routine to determine the optimal currents to use .so as to mi i-. ze the magnitude of tne residual field insi'de the shield. While I could limit the opti ization routine to oly minimize the field along the f rtical axis, this being thecomponent we are most sensitiveto in themolecular beam experiment, I do, not anticipatea significant improvemnet in the fila-ielein shimmmng by doing so give.1 th8fl three sets of coils (two pairs of transverse coils, ane set of axial) produce fieldsthat are mqstly- - rthogonal to,each other. The shimmed residual field is shown in Fig. XXX ion sect:performance.

5.5 Performance and limitations

The design requireme ts for the shieldspecified a 10 uG maximum averag e re du.a,l field. This ha een met/ t; see Fig. XXX for a ttypical measurement of the fields inside after shimming.

-Of pa.rticuler i nterest is how the fields de ve l op after the shimming procedure. To this end, I have followed their evolution ovre the course of three weeks, finding that nei t he r the average nor the ma Va l ue of any of the two transverse compil e nt s d owe not exceed the specified 10 uG (see Pi.g. Xll). Thedata in that plot has been obta,i e d by mea suring the fields evecy hour while keeping all the controllable para meters of the shield

constat. Unf or t una t el y, at the time of the mea sureme t , I did not have avaiable the me a ri s to monitor the magnetic field ext erna l to the magnetic shield, or at a y other point insi.e the shield except on-axis.

Sinc e <iegausaing is used to sig if i cant l y reduce the i nt er r1a l magnetic f i eld,, it is of interest to observe whether dega us s i ng could be used per i odi c til l y to restore the initial low ield coi1'di tions even after shimming the fields. Unfortunately, 'it appears that degaussing leaves the shield in a state of a small but signi f i ca t1t internal .:field-. Since the shield is stable eough, I believe better performa ce is obt tai ned by degaussing only at the beginning of mea s ur eme nt s , then shimming the shield, ad letting it stay hat way.

It is true that just because the shield stayed in a low-field condition for three weeks once, it is not certain it will al wa-y s stay that way for as l ong-. In o:t;her words, it would beuseful t.o comeup with a model for predicting how l ong- t he shield ,st aya this way, or what the pr oba bi l i t y - i s that is has exceeded lO -uG. If we model ,t he average i nt er nal magne t i c field as a radom walk, t hen -we can associate a diff usi on c ons t a nt to this process and calculate- the probabilities. Include the calculations for radom walk.) Of course, there is not physical reason why the growth in interal magnetic field should be a ra ndomw al ; it would be of interest to compare other possible stochastic models for this behaviour.

In addi t i on to the aQ,ee e static inter ,a l field, it i,s also important to ensure the exter al mag net i c -f i el d noi se is suf f i c i ent l y a t t e-iua t ed inside. My measurements of the dynamic shielding fac-0tr placeit around 30, 00-0 at DC (see F i g . XXL), which sh oul d . reduc-e the expected 1mG varia tions in lab field well below the l evel at which they would impact the molecular-beam mea s ur eme nt s . The frequency depend ec e of the dyna mc SF shown i nt ha t figure shwo s an i ncr ea se i n shielding as f requency incre ases, which ma ke 1;; s e nse in light cf skin ef1'ect cons i der a t i ons . For mu metal of 1 mm thickess and mur = 50k, a frequency of XX Hz would cor respond to a ski n depth comparable to the i nner - l aye r t hi c k11 e e s . (The decrease in shi eldi11g once tne maximum is achieved is l i kel y not phys i c pl , a na reflects som limitation of my mea sur i n setup. I have, howe ver , been so far unable to find out shat causes this.)

The spatial epena e nce of the dynamic SF is as shown in Fig. Xli. It w.-ill be noted

that the pattern is asymmetric, as if one side of thee shield works better than theother. That i s al so unl i ke l y to be the c@se. ImageImageFuture work may establish whet h re from my todo 1 i st)

While the dynamic shieldi follows the approximate theoretical model, the static shielding does not.b It is not clear why aegausaing achieves such good shieldi , nor is it known wti,t limits it from working even better. It appears clear from a simple model that degaussing magnetizes the shield in such a way as to oppose the external magnetic fields, that being the configuration of lowest total e argy