Relays

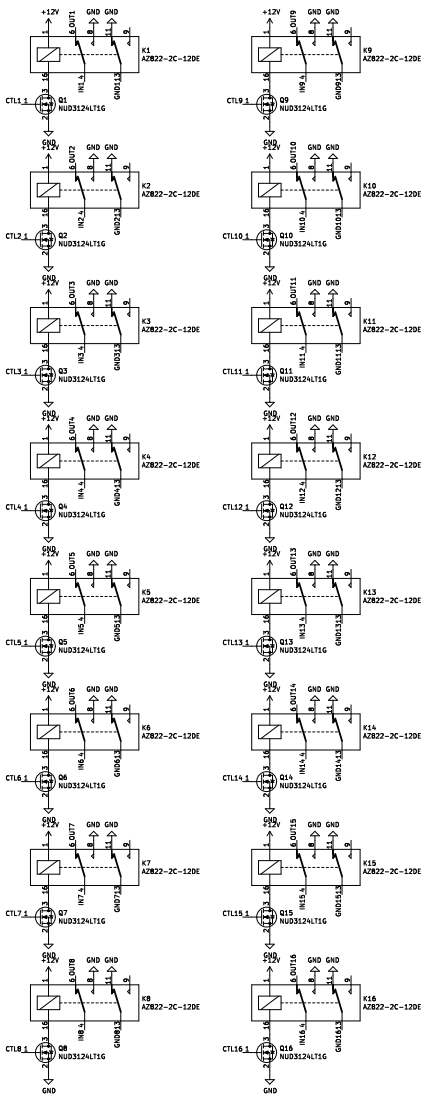

RJ45 connectors

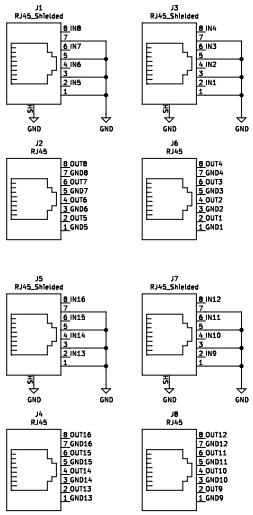

Arduino

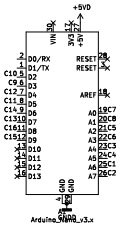

Digital isolators

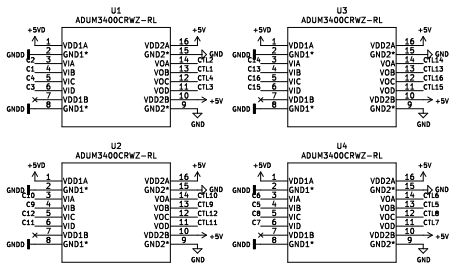

Power

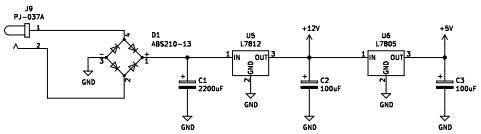

Todo:

- Do not overlap the isolator and arduino pins, it makes it hard to assemble.
- Add external pulldown resistor for Arduino pins so the relays are not in an indefined state (i.e., flipping at 60Hz) when the Arduino outputs are high-Z.
- The pulldown should be a switchable pulldown/pullup, so that the default state can be selected using a switch.

RJHSE-538O-ND	20	4	CONN MOD JACK 8P8C R/A SHIELDED
E03073-ND	20	4	Jack Modular Connector 8p8c (RJ45, Ethernet) Vertical Unshielded -
2487-AZ822-2C-12DE-ND	80	16	SUBMINIATURE DPP RELAY
NUD3124LT1G0SCT-ND	80	16	IC PWR DRVR N-CHAN 1:1 SOT23-3
ABS210-13DICT-ND	10	2	Bridge Rectifier Single Phase Standard 1 kV Surface Mount 4-SOPA
1050-ABX00033-ND	5	1	Atmega4809 Arduino Nano Every with Headers series AVR MCU 8-Bit Embedded Evaluation Board
ADUM3400CRWZ-RLCT-ND	20	4	General Purpose Digital Isolator 2500Vrms 4 Channel 90Mbps 25kV/µs CMTI 16-SOIC (0.295", 7.50mm Width)
A5780SAT-E1DI-ND	5	1	Linear Voltage Regulator IC Positive Fixed 1 Output 1A TO-220-3
NCV7812BTG0S-ND	5	1	Linear Voltage Regulator IC Positive Fixed 1 Output 1A TO-220
399-6111-ND	5	1	2200 µF 35 V Aluminum Electrolytic Capacitors Radial, Can - 2000 Hrs @ 85°C
2987-DH-20M50055-ND	5	1	USB 2.0 Cable A Male to Micro B Male 3.28' (1.00m) Shielded
WAU12-1500	5	1	12VAC 1.5A AC/AC External Wall Mount Adapter Fixed Blade Input
345-1023-ND	5	1	Heat Sink TO-220 Aluminum 2.0W @ 56°C Board Level

CL1
Centrex_logo