Search for time-reversal-symmetry violation in thallium fluoride using a cryogenic buffer-gas beam source

A dissertation prospectus by Jakob Kastelic
Advisor: David DeMille
Yale University Physics Department
March 2020

Search for time-reversal-symmetry violation in thallium fluoride using a cryogenic buffer-gas beam source

O. Grasdijk, O. Timgren, J. Kastelic, T. Wright, S. Lamoreaux, D. DeMille
Department of Physics, Yale University, New Haven, Connecticut 06511

K. Wenz, M. Aitken, T. Zelevinsky
Department of Physics, Columbia University, New York, New York 10027

T. Winick, D. Kawall
Department of Physics, University of Massachusetts Amherst, Amherst, Massachusetts 01003

The CENTREX experiment aims to provide a 30-fold increase in sensitivity over best present upper bounds on the strength of time-violating fundamental interactions by measuring shifts in nuclear resonant frequencies in thallium fluoride. I describe the motivation for studying these time-violating interactions, and provide an overview of past work. I present the current measurement scheme for this experiment. Since the apparatus is still under construction, I present the components already built, give preliminary data collected to date, and estimate the timeline for completion of the experiment.

I. INTRODUCTION

The CENTREX experiment aims to employ a molecular-beam resonance technique to measure the nuclear Schiff moment of ^{205}Tl in thallium fluoride as a test of physics beyond the Standard Model. In the following, I outline the motivation from CP-violation and baryon asymmetry, define the Schiff moment and suggest how it can be measured, review relevant features of the TlF molecule, present previous experiments, the measurement scheme proposed in this work, and the projected sensitivity increase over the state of the art.

Motivation Before the early 1960s, it was believed that CP is a good symmetry of nature. Landau pointed out that that makes it impossible for fundamental particles to have electric dipole moments [1]. When beginning their neutron EDM experiment, Purcell and Ramsey were aware of this objection [2]. Indeed, were such an EDM to be detected, that would provide clear evidence of CP-violation (CPV).

It has been found since that while most processes preserve CP, certain rare weak interactions violate it as observed in neutral K decays at the 0.003 level [3] and other systems, where it can be as high as 0.7. [4, chapter 13]. To account for the experimental evidence, the flavor-changing part of the standard model quark sector includes a CPV phase in the CKM quark-mixing matrix. [5] This so-called Kobayashi–Maskawa mechanism, which introduced the third quark generation precisely to explain CPV [6], agrees with all particle physics experiments to date. [7]

No corresponding flavor-neutral CPV has been observed yet. In principle, the QCD Lagrangian could contain a term of the form [8, eqn 1]

$$\mathcal{L} = \theta \frac{g^2}{32\pi^2} G^a_{\mu\nu} \widetilde{G}^a_{\mu\nu}, \tag{1}$$

where G^a is the gluon field tensor. Experimental evidence suggests that the strength of this term relative to the usual strong interaction is $|\theta| < 9 \cdot 10^{-11}$. Presently accepted theories cannot explain why θ should be that small; this fine-tuning issue is known as the strong CP problem. See [9] for a brief review of a few possible solutions.

At present, searches for EDMs give the most sensitive constraints on flavor-diagonal CPV. Conversely, given a particle physics model with CPV we can predict what the expected EDM of the particles is. For example, in the Standard Model, the CKM phase can produce a lepton EDM no larger than 10^{-38} e cm. Part of the reason the EDM is so suppressed is that it cannot appear below the four-loop level. [10] Given how small these effects are in the Standard Model, EDMs thus provide nearly background-free evidence of new physics. In fact, the CKM background would only become apparent when probing effects beyond the energy scale of 10^{11} GeV. [11]

The second major motivation for searching for new physics comes from the baryon asymmetry of the universe (BAU). Compared to the current number density of photons in the universe ($n_\gamma \approx 411$ cm^{-3}), the current baryons density ($n_{\mathrm{B}} \approx 2.54 \cdot 10^{-7}$ cm^{-3}) is some $1.6 \cdot 10^9$ times smaller [12, Table 17]. In contrast, the antibaryon density $n_{\bar{\mathrm{B}}}$ is smaller still; the range of upper bounds for the antimatter-to-matter number ratio has been reported as 10^{-15} to 10^{-6} [13]. I should note that the antimatter-to-matter ratio tends not to be used as a measure of BAU;

instead, authors tend to prefer the ratio

$$\eta = \frac{n_B - n_{\bar{B}}}{n_\gamma} \approx \frac{n_B}{n_\gamma} \approx 10^{-10}. \tag{2}$$

There is as of yet no commonly accepted baryogenesis mechanism, i.e., explanation for how the imbalance between the number of particles and antiparticles—the C asymmetry—came to be. In a 1967 paper, Sakharov hypothesized that CPV is necessary to explain the present C asymmetry [14] if we assume the initial conditions of the universe were C-symmetric.

However, it is claimed that the 'amount' or the 'strength' of CPV in the CKM matrix is not enough to explain the extent of the current BAU. A common argument to this effect compares the size of the dimensionless constants used to parametrize the two effects. For BAU we have $\eta \approx 10^{-10}$ as defined above, whereas for CPV the constant is no larger than 10^{-20} [15, sect 2.3]. The latter number refers to the CPV invariant that can be defined in terms of quark masses as [7, eqn 3]

$$\begin{aligned} J = A(m_\mathrm{t}^2 - m_\mathrm{u}^2)(m_\mathrm{t}^2 - m_\mathrm{c}^2)(m_\mathrm{c}^2 - m_\mathrm{u}^2) \\ (m_\mathrm{b}^2 - m_\mathrm{d}^2)(m_\mathrm{b}^2 - m_\mathrm{s}^2)(m_\mathrm{s}^2 - m_\mathrm{d}^2), \end{aligned} \tag{3}$$

where A is twice the area of any "unitarity triangle" of the CKM matrix (see [4, fig 12.1]). With quark masses from [4, p40, "Quark Summary Table"] and $A \approx 3 \cdot 10^{-5}$ from [16, p7], we get $J \approx 121 \cdot 10^3$ GeV^{12}. The electroweak phase transition, occurring at temperature $T_\mathrm{EW} \approx 100$ GeV, was the latest point in the evolution of the universe when BAU could have been generated [17]. Comparing J and T_EW, we get the desired dimensionless quantity $J/T_\mathrm{EW}^{12} \approx 10^{-20}$ to within factors of order unity and we see it is ten orders of magnitude smaller than the constant parametrizing the baryon asymmetry. Thus, new sources of CPV are needed.

Schiff moment Additional CP-violating forces would likely give rise to a nuclear EDM, whether through the EDM of unpaired protons or neutrons, via CPV interactions between valence nucleons and the core of the nucleus, or other mechanisms. [18] The EDM $\mathbf{d}$ would result from a redistribution of nuclear charge $\delta\rho$ as

$$\mathbf{d} = e \int \mathbf{r} \delta\rho(\mathbf{r}) \mathrm{d}^3 r, \tag{4}$$

and would violate CP, as follows. Since the nuclear spin $\mathbf{I}$ is the only preferred direction in a nucleus, the dipole moment also has to point along it: $\mathbf{d} = d\mathbf{I}/I$. Under time-reversal, the EDM would stay the same but the spin would flip direction. Assuming CPT to be a good symmetry, the T-violation then leads to the CP-violation.

However, Schiff proved in 1963 that an EDM of a non-relativistic point nucleus would not be observable outside

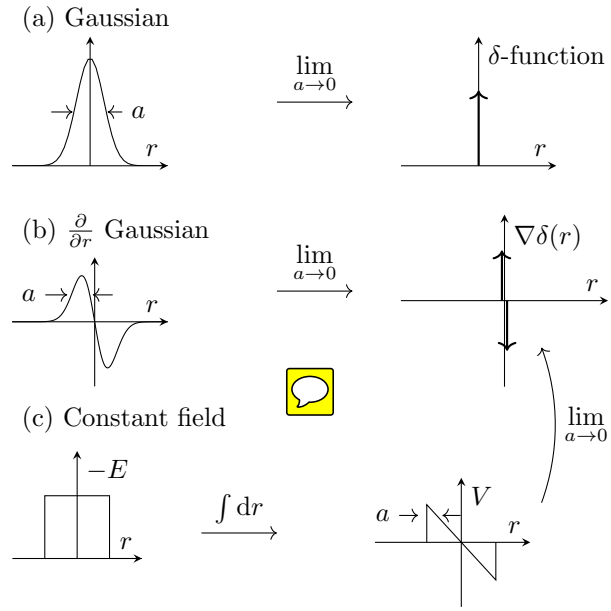

Figure 1: ***a.*** Delta function as the limit of a Gaussian. ***b.*** Gradient of a Gaussian as a representation of $\nabla\delta(r)$. ***c.*** Constant field inside the nucleus gives rise to a truncated linear potential, which has a similar shape to the derivative of the Gaussian and in the appropriate limit becomes $\nabla\delta(r)$.

of the atom. More precisely, the interaction energy of non-relativistic point charged electric dipoles in an arbitrary external electrostatic potential has no term linear in the EDM; relativistic and second-order effects are extremely small [19]. Physically, the system rearranges itself so as to screen the external field completely [18, p33]. Thus, a CP-violating EDM, if existent, would be very hard to detect experimentally without a mechanism to bypass Schiff's theorem.

In heavy atoms, the limitation posed by Schiff's theorem is lifted by the finite size of the nucleus. This necessitates writing P,T-odd nuclear potentials in the form [20, eqn 22]

$$\delta\phi = e \int \frac{\delta\rho(\mathbf{r}) \mathrm{d}^3 r}{|\mathbf{R} - \mathbf{r}|} + \frac{1}{Z}(\mathbf{d}\nabla) \int \frac{\rho_0(r) \mathrm{d}^3 r}{|\mathbf{R} - \mathbf{r}|}, \tag{5}$$

where $\rho_0(r)$ is the spherically symmetric nuclear charge distribution. The second term is responsible for the screening since it exactly cancels out the potential due to a dipole. As shown in [20, eqn 29], the above potential may, under certain assumptions, be written in the form

$$\delta\phi = -4\pi \mathbf{S} \cdot \nabla\delta(\mathbf{R}), \tag{6}$$

where $\mathbf{S}$ is the Schiff moment (SMt)

$$\mathbf{S} = \frac{e}{10} \left[\langle r^2 \mathbf{r} \rangle - \frac{5}{3Z} \langle r^2 \rangle \langle \mathbf{r} \rangle \right]. \tag{7}$$

To get an intuitive grasp on the expression $\nabla\delta(\mathbf{R})$, consider the definition of the delta function as the limit of

Gaussian distributions: $\delta(r) \sim \lim_{a\to 0} e^{-r^2/a^2}$ (Fig. 1a). Taking the derivative of the Gaussian, we get a certain shape that is negative for $r < 0$, positive for $r > 0$, zero at $r = 0$ and also vanishing for $r \to \pm\infty$. That shape (Fig. 1b), stretched to infinity but keeping the area constant, is then representative of $\nabla\delta(\mathbf{R})$.

We may think of eqns 6–7 as the potential due to a constant electric field along the direction of the nuclear spin $\hat{I}$ inside a nucleus of radius R. This potential is linear in the coordinate r, truncated outside of the nucleus (i.e., at $|r| > R$). In the limit of a small nucleus, this will have a similar shape (Fig. 1c) as the expression $\nabla\delta(\mathbf{R})$ discussed in the preceding paragraph.

A more sophisticated approach using the spherical multipole formalism gives a more general form for the leading-order Schiff moment operator which reduces to eqn 7 under certain assumptions. As discussed in [21, sect III], these may not in fact be justified.

We can estimate the magnitude of the Schiff moment caused by a single valence nucleon with a dipole moment d_n. Assume it moves in a uniform spherical core of radius $R \approx R_0 A^{1/3}$, where $R_0 \approx 1.2$ fm is the characteristic nuclear size [22, eqn 3.8]. Then the magnitude of the SMt is

$$|\mathbf{S}| \sim d_\mathrm{n} A^{2/3} R_0^2 \tag{8}$$

to within factors of order unity [23, eqn 8.76]. The $A^{2/3}$ scaling indicates that heavier atoms are preferrable for SMt experiments. Note, however, that given an SMt measurement, the preceding estimate provides only an upper bound on the nucleon's EDM since the nucleonic contribution to the SMt tends to be 10 to 100 times smaller than that due to the P,T-violating interactions between valence nucleons and the core. [20]

Molecular techniques For nuclei inside a molecule, the Schiff moment and other P,T-violating effects give rise to an effective interaction of form

$$\mathcal{H} = -d\hat{\sigma}\cdot\hat{\lambda}, \tag{9}$$

where $\hbar\hat{\sigma}/2$ is the nuclear spin, and $\hat{\lambda}$ is a unit vector along the internuclear axis in the molecule (in TlF, pointing towards the F nucleus). The interaction strength d, also written in frequency units as $\nu \equiv d/h$, can then be interpreted in terms of a molecular EDM, proton EDM, Schiff moment, or other quantities. For example, [24, eqn 26] use a calculation from [25] to obtain the Schiff moment S from the interaction strength ν:

$$S = \frac{\nu}{5.67\cdot 10^5}\frac{e\ \mathrm{fm}^3}{\mathrm{Hz}}. \tag{10}$$

Without an external electric field, the interaction of eqn 9 fails to produce any first order effects in any given rotational state. According to [26, 27], this is because the Tl nuclear spin is perpendicular to the internuclear axis in an unpolarized molecule. Alternatively, the rotation of the molecule averages $\hat{\lambda}$ to zero. [28, 24] However, if we apply an external field, the molecule becomes polarized, which destroys the inversion symmetry and a nonzero expectation results.

Compared to atoms, molecules are polarized much more readily in laboratory fields, making them ideal for such an EDM measurement. Thus Sandars suggested that a molecular-beam resonance experiment could be used to probe the existence of an electric dipole moment on the proton, so long as the molecule has a heavy atom with an unpaired proton in the nucleus. [29]

We can estimate the strength of the laboratory field required to efficiently polarize the molecule by comparing the molecular rotational level spacing $2B_\mathrm{rot}(J+1)$ with the dipole energy $d\cdot E$. Using the TlF values $d = 4.2$ Debye and $B_\mathrm{rot} = 6.7$ GHz, we can expect a 76 % alignment in a field of about 25 kV/cm for the $J = 1$ state, and the internal electric field can reach the order of 10^9 V/cm, a factor of 10^5 improvement over a typical laboratory field. [23, sect 9.1]

To obtain an upper bound on ν, ~~typically~~ a pair of states is chosen such that one of the states moves up in energy due to the interaction in eqn 9, and the other one down by the same amount, increasing the level separation by 2ν. Upon reversal of externally applied fields, the directions of the level shifts change and a level separation of -2ν obtains compared to the levels in absence of the interaction. Comparing the two perturbations of the level spacing, a 4ν difference (together with its error bars) can be quoted as the main result of molecular-beam symmetry-violation experiments.

Separated oscillatory fields. The spacing between the levels in the preceding paragraph can be measured by a simple Rabi oscillation technique. Consider two states, $|p\rangle$ and $|q\rangle$, separated by an energy $\hbar\omega_0$. Subjecting the two-state system to an oscillating field of form $\hbar b e^{-i\omega t}$, the population transfer probability is given by [30, eqn V.10]

$$P_{p,q} = \frac{(2b)^2}{(\omega_0-\omega)^2+(2b)^2}\sin^2\left\{\frac{t}{2}\sqrt{(\omega_0-\omega)^2+(2b)^2}\right\}.$$

We see the transfer is maximised for a resonant field, $\omega = \omega_0$, and the full width at half maximum (FWHM) is given by $\Delta\omega = 4b$. For a resonant $\pi/2$ pulse of duration $t = \pi/2b$, the FWHM will be $\Delta\omega = 2\pi/t$, and the longer the precession period t, the more precisely we can determine the resonant frequency ω_0.

In principle, an infinitely precise measurement could be obtained by simply extending the length l of the precession region. In practice, however, this meets with the following problems: (1) the beam intensity decay to zero if the

beamline is too long; (2) we may want to measure the precession in a region where the oscillating field cannot be applied; (3) it is difficult to maintain uniform externally applied fields over an extended length.

It turns out that the oscillating field does not need to extend over the entire length of the precession region. In Ramsey's resonance scheme, separated oscillating fields are only applied in two small regions at the beginning and at the end of the interaction region, each applying a $\pi/2$ pulse. The resulting FWHM is about 40% smaller that that obtained in a simple Rabi oscillation scheme, and the resonances are less broadened by the non-uniformity of the fixed field. [31]

Beam sources. To form a molecular beam, traditionally a thermal molecular source has been used. For example, Schropp et al. [32] report having a source at temperature 380 °C that yields a fraction 3×10^{-4} of molecules in the desired state $J = 1$, $m_J = 0$. Similarly, Hinds and Sandars [26] used a TlF-containing copper oven stabilized to a temperature of 340 ± 1 °C, forming a molecular beam from the vapor effusing from an array of channels. Hunter et al. used a ceramic chamber filled with TlF at 415–460 °C and passed the vapor through ceramic tubes and an aperture to collimate the beam.

More recently, Norrgard et al. [33] have adapted a cryogenic buffer gas source from that used by Barry, Shuman and DeMille [34] for strontium monofluoride. Instead of producing vapors by direct heating of a mass of solid TlF, the solid is kept at roughly 4 K and molecules are released by ablation with a pulsed 1064 nm laser. Once away from the solid, they are extracted from the cell by becoming entrained in the flow of cryogenic buffer gas, typically helium or neon. The resulting beam tends to be slower, colder compared with conventional methods of molecular beam production. See [35] for a review of cryogenic buffer gas beam sources.

Give quantitative details about beam sources [Hutlzer's thesis]

The TlF molecule TlF is a suitable system to look for P and T violating interactions for a number of reasons: a molecular beam of thallium fluoride can readily be obtained by following the lead of a number of previously published papers; the properties of the molecular states and transitions are available in the literature; the species is a polar diatomic molecule, enhancing the effective electric field acting at the site of the nuclei; the thallium nucleus being very heavy, the Schiff moment is correspondingly relatively large (as per eqn 8); and the nucleus contains an unpaired proton, making measurements potentially sensitive to proton EDM effects. [29, 27]

All lasers in this experiment address transitions between the $v = 0$ vibrational sublevels of the electronic states $X^1\Sigma^+$ and $B^3\Pi_1$, where X denotes the ground state, and B is one of the excited states with a lifetime of about 99 ns. The quantum numbers used to describe the states usually refer to a modified Hund's case (c) basis with the additional couplings $\mathbf{F}_1 = \mathbf{J} + \mathbf{I}_1$ and $\mathbf{F} = \mathbf{F}_1 + \mathbf{I}_2$, where $\mathbf{I}_1$ and $\mathbf{I}_2$ refer to thallium and fluorine nuclear spins, respectively. Thus a particular hyperfine level can be written in either the decoupled basis as $|J, m_J, I_1, m_1, I_2, m_2\rangle$ or in the coupled basis as $|J, \Omega, I_1, F_1, I_2, F, m_F\rangle$, where Ω is the projection of J on the internuclear axis and m_F is the projection of F in the laboratory frame. [33]

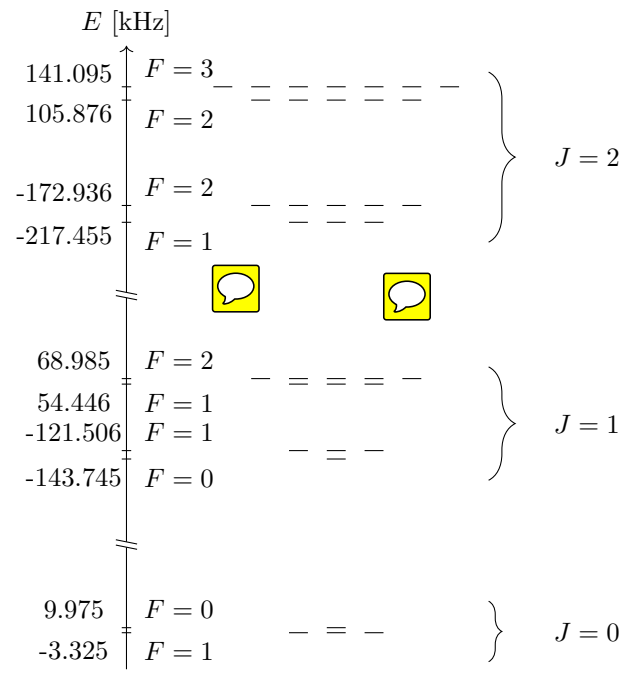

Figure 2: First three rotational levels in the TlF ground state $X^1\Sigma^+$ zero-field energy levels. Rotational energies $BJ(J+1)$ are subtracted from the energies indicated on the axis. Note the $(2F+1)$-fold degeneracy, corresponding to the quantum numbers $m_F = -F, \ldots, 0, \ldots, F$.

Change of basis transformation between the two frames

Ground state. The structure of the ground state can be described by the effective Hamiltonian given in Table 1 of ref. [27] and is illustrated in Fig. 2 in the absence of electric and magnetic fields. The largest effect is the rotational energy $\mathcal{H}_{\text{rot}} = hB_e\mathbf{J}^2$ with the rotational constant of order $2B = 13.4$ GHz. More precisely, the rotational-vibrational energy levels of a diatomic molecule are given by the so-called Dunham expansion [36]

$$T_{vJ} = \sum_{lm} Y_{lm}(v + 1/2)^l [J(J+1)]^m.$$

In practice, however, we find that the lowest few microwave rotational transitions are sufficiently well described using only the rotational constant in equilib-

rium position $B_e \equiv Y_{01}$ and the first term $\alpha_e \equiv Y_{11}$ using NIST data [37], yielding the effective constant $2B = 13.28958$ GHz for the isotope $^{205}\mathrm{Tl}^{19}\mathrm{F}$.

Due to a coupling of molecular rotation to the nuclear spin magnetic moments, hyperfine levels are made non-degenerate by an interaction $\mathcal{H}_{\mathrm{sr}} = c_1(\mathbf{I}_1 \cdot \mathbf{J}) + c_2(\mathbf{I}_2 \cdot \mathbf{J})$, with $c_1 \approx 126$ kHz and $c_2 \approx 18$ kHz. The next largest effect is due to direct dipole–dipole coupling between the nuclear spins; Brown and Carrington [38, eqn 4.17] give it in terms of the nuclear g-factors and the internuclear displacement vector $\mathbf{R}$ as

$$\mathcal{H}_{\mathrm{ss}} = \frac{g_1 g_2 \mu_N^2}{4\pi\epsilon_0 c^2}\left\{\frac{\mathbf{I}_1 \cdot \mathbf{I}_2}{R^3} - \frac{3(\mathbf{I}_1 \cdot \mathbf{R})(\mathbf{I}_2 \cdot \mathbf{R})}{R^5}\right\},$$

while Ramsey [27] gives an effective form, valid for small (less than approx. 20 kV/cm) electric fields when J is a good quantum number. See ref. [33] for corresponding details of the rotational and hyperfine Hamiltonian for the excited state $B^3\Pi_1$.

Read ch. 2 of Hutzler's thesis to learn more about molecular structure

Externally applied electric field causes Stark effect, $\mathcal{H}_{\mathrm{S}} = -\mathbf{d} \cdot \mathbf{E}$, while a magnetic field gives rise to the Zeeman effect, as follows:

$$\mathcal{H}_{\mathrm{Z}} = -\frac{\mu_J}{J}(\mathbf{J} \cdot \mathbf{B}) - \frac{\mu_1}{I_1}(\mathbf{I}_1 \cdot \mathbf{B}) - \frac{\mu_2}{I_2}(\mathbf{I}_2 \cdot \mathbf{B}).$$

Since molecular-beam experiments usually involve motion between regions with highly varying electric fields, care must be taken to ensure that populations do not inadvertently transfer through non-adiabatic transitions, or by loss of a quantization axis in a region where the applied fields exactly cancel.

Explain the calculation of ground state Hamiltonian matrix elements.

Excited state. What is there to say about the structure of the excited state?

Calculation of relevant branching ratios

The existence of an optical cycling transition in TlF allows for near-unity detection efficiency despite a limited ability to collect and detect individual photons. [39] The large number of photons that can be scattered off a single molecule could also be used to slow or trap molecules, thus increasing the experimental sensitivity beyond that projected for the initial version of the CENTREX experiment.

What other details about TlF to describe? Perhaps more about dark states?

Previous experiments The first P,T-violation experiment using a molecular beam of thallium fluoride was done in Oxford in 1969 [40], the result being reported as $\nu = 0.08 \pm 0.11$ Hz, or, in terms of proton EDM, as $|d_{\mathrm{p}}| = (7 \pm 9) \times 10^{-21} e$ cm. They employed ~~the~~ triple resonance scheme: first, ~~the~~ $J = 1$ molecules were transferred from $m_J = 0$ to $m_J = \pm 1$. The second resonance which changed the Tl nuclear spin projection from $\pm 1/2$ to $\mp 1/2$ is not directly observable; however, after the molecules are transferred back to $m_J = 0$, the amount of the non-observable spin flips can be estimated and related to the desired frequency shifts 4ν.

About a decade later, Hinds and Sandars [26] reported a similar experiment giving the null result of $\nu = 11 \pm 42$ mHz or $|d_{\mathrm{p}}| = (1.8 \pm 7) \times 10^{-21} e$ cm. Looking for P and T violating interactions in ^{205}TlF, they tried to measure shifts of the resonant frequency which depends on the relative directions of externally applied parallel electric and magnetic fields. The experiment used a beam of TlF produced by vapors effusing from a hot oven through a state-selecting region that approximately transmits only molecules with $J = 1$, $m_J = -1$, $m_{\mathrm{Tl}} = +1/2$, $m_{\mathrm{F}} = -1/2$. In the interaction region, separated oscillating magnetic fields induce some molecules to flip the Tl spin to $m_{\mathrm{Tl}} = -1/2$. Finally, a second state selector transmits only the molecules without the spin flip, and the final beam intensity, as measured by a hotwire surface ionization detector, is a sensitive measure of the shift in the resonance given that the 10 m separation of the oscillating coils results in a 20 Hz linewidth. However, the experiment gave an accuracy comparable to the experiment in [40] because of an unexpectedly large reduction of the resonance signal and high background rate.

Using a similar setup, Wilkening, Ramsey, and Larson [27] reduced the error bars to $\nu = 8 \pm 21$ mHz or $|d_{\mathrm{p}}| = (1.3 \pm 2.0) \times 10^{-21} e$ cm. In their experiment, the thermal beam of TlF passes through an electrostatic quadrupole field that focuses the $J = 1$, $m_J = 0$ state, leaving the others unselected. Thereafter, a 'subsidiary resonance' region transfers the molecules into the state $m_J = -1$, $m_{\mathrm{Tl}} = -1/2$, $m_{\mathrm{F}} = -1/2$. However, instead of using oscillating fields to do so, it relies on adiabatic transitions that conveniently happen to transfer population into the desired state. As was the case in the preceding experiment, the main interaction region causes the Tl nuclear spin to flip. Finally, second subsidiary resonance region transfers the flipped molecules to the $m_J = -1$ hyperfine state which is defocused by the second quadrupole, causing a change in the beam intensity measured by the hot-wire detector at the end of the beamline.

Cho, Sangster, and Hinds [28, 24] found the upper bound $\nu = (1.4 \pm 2.4) \times 10^{-4}$ Hz or $|d_{\mathrm{p}}| = (-3.7 \pm 6.3) \times 10^{-23} e$ cm. Again, a quadrupole selects $J = 0$, $m_J = 0$ molecules, which subsequently transition to one of the $m_J = \pm 1$ sublevels in a combination of static and RF electric fields, either $(m_J, m_{\mathrm{Tl}}, m_{\mathrm{F}}) = (-1, +1/2, -1/2)$ or

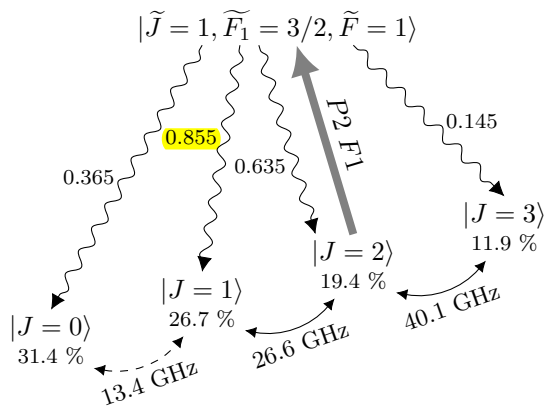

Figure 3: Proposed rotational cooling scheme. The thick solid arrow marks the UV laser driving the $P2$ $F1$ transition, while the bent arrows represent microwaves of stated frequencies (the dashed 13.4 GHz microwaves might be omitted in the final version). The wavy lines indicate spontaneous emission, with rotational branching ratios taken from ref. [33, Table IV]. The percentages under the ground-state kets are the expected thermal population at 8 K before beginning rotational cooling.

$(+1, -1/2, +1/2)$. Then, separated oscillating magnetic fields in the presence of a strong electric field induce a nuclear spin flip in Tl, observed after a second state selector and quadrupole filter by measuring the ion current produced by a hot, oxygenated tungsten filament. The improved upper bound was due to a more intense and rotationally colder beam of TlF monomers, and due to an additional reversal, switching between the two hyperfine states as listed above.

What other important parameters of each experiment should I include? What other papers should I review (other molecular or atomic species, non-proton EDMs, other)?

Overview of the CENTREX scheme Molecules emerging from a cryogenic buffer gas beam source initially populate a range of low-lying states with an approximate temperature of 8 K. In order to facilitate transfer to the 'science' state used for the spin precession measurement, molecules first enter rotational cooling region to accumulate population in a single hyperfine level. Then, to limit the spreading of the beam, the molecules get focused by an quadrupole electrostatic lens. Before a free flight thorough the interaction region, the molecules are prepared into the correct hyperfine state. Finally, we probe the resulting spin direction to determine the extent of the possible dependence of the spin precession frequency on the interaction region electric field direction.

Rotational cooling (Fig. 3). Assuming a simple Boltzmann distribution at 8 K, almost 90 % of the molecules have J in the range from 0 to 3. To move these molecules to $J = 0$, we first set up microwave couplings $J = 1 \leftrightarrow 2$ and $2 \leftrightarrow 3$. Then, a UV laser beam centered on the $P2$ $F1$ line lifts the population from $J = 2$ into the excited state $\widetilde{J} = 1$. While the ground-state hyperfine splitting is smaller than the laser linewidth, the excited state hyperfine levels are well separated, allowing us to address the $\widetilde{F} = 1$ level. Due to the selection rule $\Delta F = 0, \pm 1$, only three of the four $J = 2$ sublevels (with $F = 1, 2, 2$) can be emptied into $\widetilde{J} = 1$. The latter state in turn decays mostly into the lowest four rotation states, so that eventually the majority of the population is expected to accumulate in the $J = 0$ state.

Branching ratio argument why $F1$ instead of $F2$? Microwaves to empty out the $J = 0$, $F = 1$ state. Dark states? Polarization switching? Frequency-switching of microwaves vs power broadening.

State transfer 1. The population that has been collected in the $J = 0$, $F = 0$ sublevel has to be moved to a state in the $J = 2$ manifold, where the molecular beam can be collimated by the electrostatic lens. We plan to accomplish the transfer as a two-stage adiabatic rapid passage (ARP): first $J = 0 \to 1$, then $1 \to 2$. As the particles travel through a spatially-varying electric field, the separation between the hyperfine levels in the different J states changes due to the DC Zeeman effect. In the same region, we place two microwaves beams corresponding to each pair of J states, and offset them by approximately the FWHM of each beam. As the molecule traverses each beam, it is successively driven through the respective microwave resonances, making the population jump first to $J = 1$, and then to $J = 2$.

To keep the state transfer adiabatic, the electric field (and the resulting level separation, and the detuning $\Delta\omega(t)$ between the microwaves and the state spacing) has to change slowly compared with the Rabi frequency of the microwaves $\Omega_{\mu\mathrm{w}}$. For a Rabi frequency much greater than the detuning, ref. [41] gives the adiabaticity condition as

$$\Omega_{\mu\mathrm{w}} \gg \frac{d}{dt}\Delta\omega(t).$$

The other requirement for ARP is that the passage is *rapid* compared to the spontaneous lifetime of the states involved in the transition. [42]

In the Bloch sphere picture, the precession of the state vector around the Rabi vector is fast. As the field is detuned through the resonance, the Rabi vector inverts, while the state vector adiabatically follows it, achieving a near-perfect state transfer.

Explain ARP more quantitatively with Bloch equations.

Electrostatic quadrupole lens. Molecules leave the beam source spread over a wide solid angle, so the beam intensity decays roughly as the distance squared from the

source. To couteract this effect, we intend to collimate the beam, or focus it on the detection region, some seven meters away from the source.

It turns that that an appropriate field distribution can be used as an analogue to the optical lens [43], the condition being that inside the lens, moleculex experience a restoring force proportional to the displacement r of the molecule from the axis. For a quadrupole field, the magnitude of the field is $|E| = Vr/R^2$, where V is the potential difference between oppositely-charged electrodes and $2R$ the distance between opposite electrodes. [44] Furthermore, since the $J = 2$ state of thallium fluoride has a quadratic Stark effect at high fields (~ 30 kV/cm), this results in the desired quadratic potential energy, or a linear restoring force. Ref. [45] makes the optical analogy exact in terms of ray-transfer (or 'ABCD') matrices, whereby the condition for focusing results in the standard expression for a thin lens of focal length f

$$\begin{pmatrix} r \\ \dot{r}/u \end{pmatrix} = \begin{pmatrix} 1 & 0 \\ -1/f & 1 \end{pmatrix} \begin{pmatrix} r_0 \\ \dot{r}_0/u \end{pmatrix},$$

where u is the component of velocity along the beam direction (making $\dot{r}_0/u$ proportional to the angle relative to the axis), and $r_0(t)$ the pre-lens displacement of the molecule from the beam axis.

Which hyperfine state are we choosing for the lens state?

State transfer 2. A second state preparation region will take molecules out of the lens $J = 2$ state and into the appropriate $J = 1$ state required by the interaction region. Details will be decided upon based on experimental results from the first state preparation region.

Interaction region. A high external electric field polarizes the molecules to achieve a large internal electric field, thus amplifying the sensitivity to tiny effects due to the Schiff moment. The measurement will be done using the method of separated oscillatory fields as explained above.

Which exact hyperfine states are to be used?

What will be our switching sequence?

Projection and detection. While the detection scheme has not yet been finalized, we expect we will be able to map the two spin states from the interaction region to two different rotational states using microwaves. Unlike some of the experiments discussed above, CENTREX will employ laser-induced fluorescence (LIF) to detect the ~~amount~~ of molecules in the final rotational states. Compared to hot-wire or absorption techniques, LIF has the advantage of observing a signal against a dark background (modulo light scattered from the optics and vacuum chamber windows). [46] Furthermore, since the emitted light can be collected at different angles, we can obtain spatial information about the detection process. [47]

For a near-unity LIF detection efficiency, we are going to use the following optical cycling scheme. Present the optical cycling.

Projected sensitivity In general, the statistical sensitivity of a molecular EDM experiment depends on electric polarization P, coherence time τ, detection rate $\dot{N}$, total measurement time T, and other factors encoding the intrinsic sensitivity of the system. For measurements of the Schiff moment in a nucleus with mass A and atomic number Z, the sensitivity scales as $P\tau\sqrt{\dot{N}T}AZS_0$, where S_0 depends on the details of the nuclear structure. [23]

The 30x sensitivity improvement estimate over the state of the art.

Checks for systematics

II. SIMULATIONS

Rotational cooling

Non-adiabatic transitions Molecules travelling from the first state preparation region into the electrostatic lens experience fast changes in external electric field. Due to the large number of hyperfine levels involved, predicting level stability is a non-trivial task. As a consequence of the von Neumann–Wigner rule [48], levels of same symmetry will in general avoid crossing each other. Considering only a single such avoided crossing between a pair of states, we may model the situation using the two-level Hamiltonian

$$H = \begin{pmatrix} \delta - \alpha\epsilon^2 & \beta \\ \beta & 0 \end{pmatrix}, \tag{11}$$

where $\delta \sim 2\pi \times 100$ kHz is the field-free level separation, $\alpha\epsilon^2$ is the level ~~repulsion~~ due to a quadratic Stark effect; thus α sets the field at which the Stark effect cancels δ (typically, tens or hundreds of V/cm). Finally, β is the level coupling that gives rise to the avoided crossing.

The Hamiltonian H may be diagonalized exactly to give the eigenenergies $E_\pm$ and states $\psi_\pm$. To investigate the effect of subjecting the molecule to a time-varying electric field $\epsilon(t)$, we can assume that at $t = 0$ the system starts in the state ψ_+. After solving the time-dependent Schrödinger equation (TDSE) $id\psi/dt = H\psi$ for the final state ψ_f, we can evaluate the probability $P_\mathrm{trans} = |\langle\psi_\mathrm{f}|\psi_-\rangle|^2$ the system has transitioned to the other field-free eigenstate.

If the electric field is chosen such that the system is taken through the avoided crossing in a time T_fall, then the transition probability $P_\mathrm{trans}(T_\mathrm{fall})$ approaches zero in both limits $T_\mathrm{fall} \to 0$ and $T_\mathrm{fall} \to \infty$ (see Fig. 4a). For intermediate times, the system exhibits a pattern of interference fringes, with P_trans very sensitive to the exact

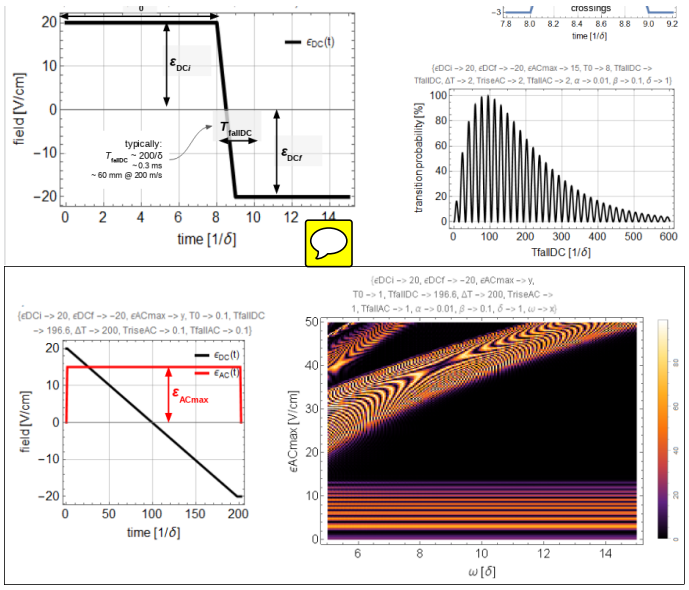

Figure 4: AC level stabilization against non-adiabtic transitions when subjected to time-varying electric fields. ***Top.*** The transition-probability interference fringes as a function of field reversal time. ***Bottom.*** Adding an AC field results in separated regions of high P_{trans} against a transition-free background. TODO: Make the labels readable!

timing of the electric field changes. For a molecular beam entering the electrostatic lens with a range of velocities, an initial hyperfine level could end up in a range of final states, preventing and defeating the focusing otherwise expected of the lens.

Adding to the above a rapidly-oscillating AC electric field can under certain conditions suppress the transitions otherwise expected in the absence of the AC field. A plot of P_{trans} with respect to the parameters of the AC field (Fig. 4b) shows separated regions of high P_{trans} against a transition-free background. Furthermore, one of the regions does not show dependence on the frequency ω of the oscillating field, while the other regions show what appears to be polynomial dependence on ω.

The above results can be qualitatively be interpreted in terms of Floquet theory for 'stationary' states of periodically driven systems [49, ch. 5]. It can be proven that the TDSE of such a system has solutions of form [50, sect. II.A]

$$\exp(-i\epsilon_\alpha t\hbar)\Phi_\alpha(x,t),$$

where the periodic Floquet modes $\Phi_\alpha(x,t)$ satisfy a 'time-independent' Schrödinger equation (TISE) in extended Hilbert space $L_2[0,T]\otimes H$

$$\underbrace{\left[H(t) - i\hbar\frac{\partial}{\partial t}\right]}_{\widetilde{H}}\Phi_\alpha(t) = \epsilon_\alpha\Phi_\alpha(t),$$

To obtain the matrix elements of the Hamiltonian thus modified, we expand the Floquet modes in a basis $\{|k\rangle\}$ of H, and also in terms of nth order plane waves $e^{in\omega t}$:

$$\Phi_\alpha(t) = \sum_k \sum_{n=-\infty}^{\infty} c_\alpha^{kn} e^{in\omega t}|k\rangle.$$

Insert into the TISE, pre-multiply by $\langle j|e^{-im\omega t}$, and time-average over one cycle to obtain

$$\sum_{kn}\langle j|\widetilde{H}|k\rangle c_\alpha^{kn} = \epsilon_\alpha c_\alpha^{jm},$$

where the matrix elements of the extended Hamiltonian $\widetilde{H}$ are given in terms of the original Hamiltonian split into constant and time-varying parts $H(t)\equiv H_{\text{DC}}+H_{\text{AC}}(t)$:

$$\begin{aligned}\widetilde{H}_{nm}^{jk} &= H_{\text{DC}}^{jk}\delta_{nm} + n\hbar\omega\delta_{nm}\delta^{jk} && \text{(atom + light)}\\ &+ \frac{1}{T}\int_0^T H_{\text{AC}}^{jk}(t)e^{i(n-m)\omega t}dt. && \text{(interaction)}\end{aligned}$$

Here, the lower indices refer to a particular 'photonic' mode, and the upper indices refer to the matrix elements of the original Hamiltonian.

The interaction term in the above general expression can easily be found for the case of the two-level model in eqn. 11. When an electric field $\epsilon(t)\equiv\epsilon_{\text{DC}}+\epsilon_{\text{AC}}(t)$ is applied, the AC part of the Hamiltonian is

$$H_{\text{AC}} = -\begin{pmatrix}\alpha & 0\\ 0 & 0\end{pmatrix}\left(2\epsilon_{\text{AC}}\epsilon_{\text{DC}}\cos\omega t + \epsilon_{\text{AC}}^2\cos^2\omega t,\right)$$

which may be time averaged to find the AC matrix elements

$$\begin{aligned}-(H_{\text{AC}})_{nm}^{00} = \Bigg[&\epsilon_{\text{AC}}\epsilon_{\text{DC}}(\delta_{n,m-1}+\delta_{n,m+1})\\ &+\epsilon_{\text{AC}}^2\left(\frac{\delta_{n,m}}{2}+\frac{\delta_{n,m+2}}{4}+\frac{\delta_{n,m-2}}{4}\right)\Bigg].\end{aligned}$$

The Kronecker deltas give the order of the atom–photon interaction. For instance, the 0th order term proportional to $\delta_{n,m}$ modifies the Hamiltonian to the effective form

$$H_{\text{eff}} = \begin{pmatrix}\delta-\alpha\left(\epsilon_{\text{DC}}^2+\epsilon_{\text{AC}}^2/2\right) & \beta\\ \beta & 0,\end{pmatrix};$$

i.e., the 0th order effect of the AC field is a simple AC Stark shift. This suggests that the mechanism through which the AC field suppresses transitions is by limiting the effective minumum value of the DC field, such that the system no longer passes through the avoided crossing.

The higher order interactions—those due to $\delta_{n,m\pm1}$ and $\delta_{n,\pm2}$ terms—expand the Hilbert space of the two-state Hamiltonian, effecting a tensor product with the corresponding Kronecker matrices. The effect on the spectrum is to replace the two states with an infinite set

of pairs of states, each pair separated from the next by the energy $\hbar\omega$ of a single photon. Plotted as a function of the electric field, we note that in addition to the avoided crossings present in the 'unperturbed' Hamiltonian, new crossings appear as a result of interactions with the virtual photons.

The new crossings typically appear at higher fields than the original ones and thus do not cause transitions unless the inverting DC field is of sufficient magnitude to reach them. In the simulation resulting in Fig. 4b, the DC field is assumed to traverse the inherent avoided crossing and not much further. However, in the flight of molecules towards the electrostatic lens, fields of order 30 kV/cm get reversed in a characteristic time $T_{\text{fall}} \sim 10^{-4}$ s $\sim 10/\delta$. In order to move the induced avoided crossings beyond the reach of these fields, the applied AC field would need to have a frequency of order 900 GHz. Alternatively, the AC field could be confined to a region where the DC field does not depart too far from zero.

Optical cycling

III. APPARATUS

As detailed in the section on the measurement scheme, CENTREX follows the design of a conventional molecular beam experiment. Fig. 5 displays an outline of the entire apparatus, and the following paragraphs give information about its construction.

Control software The experimental parameters are monitored and controlled using a range of devices~~, as given in the following~~. Most of these have already been integrated into a central data acquisition (DAQ) system. At present, the latter consists of a single highly configurable Python program running on all computers attached to the experiment, communicating with the devices connected to the computer and writing the obtained data to the local disk. In the future, we intend to set up a common data and backup server to deal with the greatly increased data generation rate once the entire apparatus is up and running.

The program's code is divided between classes that make up the graphical user interface (GUI), and control classes which make use of driver classes to communicate with physical instruments. In addition, all program configuration is contained in `.ini` files in subdirectories of the so-called `config` directory, allowing for simple modification and extension of the DAQ system without changing the main program code. This configuration is loaded into the relevant `Config` class (e.g. `DeviceConfig`).

The user controls the devices through the `ControlGUI`, which is a canvas for control of recording and external devices. The information in device config files is automatically read and translated into usable controls that appear in the GUI. Underneath the graphical interface, several classes implement the program's functionality:

(1) `Device` objects run each within its own thread, instantiate device drivers, and poll devices at regular intervals for data as well as check for normal operation insofar as supported by the driver, pushing this information into data and events queues specific to each device. In addition, these objects serve as an unified abstract interface to all the drivers and related information, especially through the `config` member (of type `DeviceConfig`).

(2) `Monitoring`: While the `Device` objects collect information from the physical devices, they neither record it nor notify the user if any abnormal condition obtains. Thus the main program instantiates one `Monitoring` object to read some of the data, display it in the main interface, and send it to an external central database.

(3) The `HDF_writer` stores the data collected by `Device` objects to an file for future reference and analysis. The files are of Hierarchical Data Format (HDF), version 5 format [51], a portable, cross-platform format that provides APIs for commonly scientific computing languages. The format is extensible, open, and structured, allowing storage of data and its description in terms of arbitrary attributes, column names, and groups.

(4) `Config` classes serve to organize access to program/device/plot configuration. Thus, instead of having classes pass ad hoc pieces of information between each other, they set an appropriately-named attribute of the relevant `Config` class. The latter in term only allows to set the attributes that have been declared previously. This enables the programmer to have a clear overview of what configuration parameters exist by simply inspecting the relevant `Config` class.

The program is thus generic enough to make it easy to add capabilities to control any number of new devices by simply (1) writing a device driver, and (2) a device config file. Drivers are classes inside the Python modules, such that instantiating the driver class is the abstract representation of opening a connection to a physical device. In addition, a driver class provides a `ReadValue()` method that implements the particulars about how reading data works, and should return a list of values, consistent with the `dtype` and `shape` of the device as specified in the constructor. The driver must also provide a function `GetWarnings()` that is be called at regular intervals to populate the list of `warnings`. This function can check for the device parameters are within normal ranges, or simply do nothing if appropriate.

Upon starting, the program reads the main config file

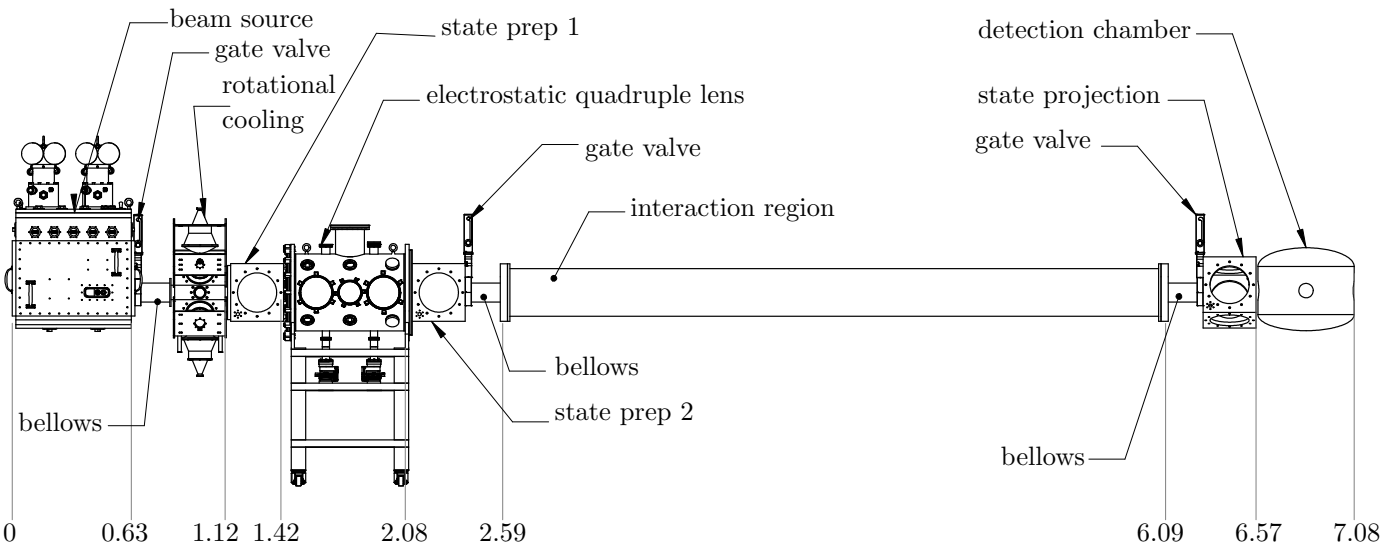

Figure 5: Overview of the CENTREX beamline without the magnetic shield around the interaction region. Note that the second state-preparation region, and the detection chamber, have not yet been designed. The horizontal ordinate is given in meters.

`config/settings.ini` that defines general program settings; the values are read by the instance of `ProgramConfig` class. Device configurations are read from `.ini` files in the chosen directory. Thus choosing a different directory allows for a different set of devices or device configurations to be loaded. These files define the controls that to appear on the screen for each instance of a device, the driver commands called from these controls, and their default values.

The device `.ini` file should specify whether the device is a slow or a fast device. A slow device is expected to return only a few values each time its `ReadValue()` is called, and thus requires a single dataset to contain all the data. A fast device can return thousands or millions of datapoints each time it is polled, together with metadata that describes this particular set of values. Thus, the program creates a new dataset for each invocation of `ReadValue()` of a fast device.

Beam source The beam source works by ablation of a solid sample of TlF held at cryogenic temperatures in a thermally shielded vacuum chamber. The ablated particles are expelled from the ablation cell by a flow of cold neon buffer gas. The design has been adapted from the beam source used in ref. [34] with significant modifications.

Include a diagram of the beam source.

The ablation cell is a 1.500 in high cuboid with top and bottom square faces with a 2.000 in side, machined out of OFHC copper (Cu 101). The internal volume consists of two intersecting cylinders of diameter $d = 1.150$ in and length $L = 2.000$ in. According to a formula known to Archimedes [52], the volume common to the two cylinders is $\frac{2}{3}d^3$, making the internal cell volume for two cylinders to be $V = 2L\pi\frac{d^2}{4} - \frac{2}{3}d^3 \approx 3.14\ \text{in}^3$. The actual internal volume is larger than that due to the way windows are attached to the cell.

Three of the four circular openings in the cell are closed with fused silica windows, while the forth is covered by a thin plate of OFHC copper (0.050 in thickness) with a 1/4 in aperture as the molecular beam exit nozzle. Unlike similar beam sources, the exit aperture is *not* followed by a conical collimator, since we found it interferes with the collision-mediated beam thermalization processes (an effect highly sensitive to the exact placement, shape, and dimensions of the collimator). In order to protect the window through which the ablation laser (Fig. 6) enters from the immediate ablation by-products, the window is offset by a 3 in-long 'snorkel', a cylinder of outer diameter 1.250 in, and an hole with internal diam. of 0.9 in going through the entire length of the piece. The cylinder is terminated on one end in a way that allows attaching it to the cell, and on another by a fitting for the window.

The cell opening opposite the ablation laser is covered by the target holder, a copper piece machined so as to contain a volume of solid TlF. The targets are prepared in a separate chamber by filling them with powdered 99 % pure thallium(I) fluoride (supplied by Strem Chemicals, Newburyport, MA, under product number 93-8106) and heating to a temperature just above the melting point 327 °C. In the early stages of beam characterization, the target holder had a small (1/4 in diam.) opening, covered by another snorkel and window, to allow for absorption probing the TlF population in the cell.

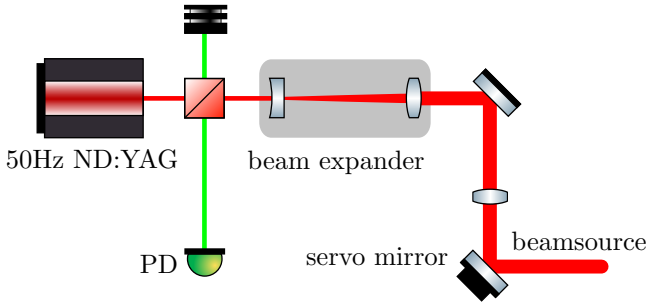

Figure 6: The ablation laser for the beam source is a pulsed Nd:YAG, provinding 4 ns pulses of maximum energy 130 mJ at max. 50 Hz (Nano LG 130-50 by Litron Lasers Ltd, UK). In beam source tests, we have commonly run it such that the pulse energy is approx. 35 mJ, at a repetition rate of 5–10 Hz. The photodiode receives a small amount of light split off the main beam, and is used for monitoring the laser power. [Drawing by O. Grasdijk]

The buffer gas is 99.999 % pure neon, supplied by TechAir (Naugatuck, CT). Outside the vacuum chamber, neon flow is moderated by a 412 series dual-stage pressure regulator (Concoa, Virginia Beach, VA), and a mass-flow controller (MKS Instruments, Andover, MA; part number 1179C00212CR1AV) that allows up to 100 sccm of flow. The gas is fed from the bottle using 1/4 in copper tubing.

The opening opposite the cell exit nozzle has a 0.375 in opening that allow optical access along the direction of the molecular beam. In addition, perpendicularly through the same hole, the neon buffer gas enters the cell through a 1/16 in opening. The gas enters the beam source vacuum chamber via a KF40-to-VCR (1/8 in) feedthrough (Accu-Glass Products, Valencia, CA; part number 113030). To thermally separate the room-temperature vacuum chamber from the cryogenic parts, the connection is insulated by smooth-bore seamless 304 stainless steel tubing, 1/8 in OD, 0.02 in wall thickness (McMaster-Carr Supply Company, Elmhurst, IL; part number 89895K711). The stainless tubing is approx. 3 ft long, wound in a coil (approx. diam. 3 in) to save space. The gas line is thermally connected to the 40 K shield by flowing through 1/8 in copper tubing wound around and brazed on a 3/4 in-diam. copper bobbin that is fixed to the 40 K shield with a threaded rod. Another similar coil of stainless tubing limits heat flow from the 40 K shield to the cell. Finally, the neon thermalizes to the cell temperature by flowing through an approx. 6 in-long segment of 1/8 in copper tubing that is brazed to the piece that attaches to the cell.

The cell is screwed onto the cold stage of the PT815 cryocooler (made by Cryomech Inc., Syracuse, NY). The cell is shielded from ambient thermal radiation by a two-state heat shield. The outer shield, made of aluminum 1100, hangs from the top plate of the vacuum chamber on stainless threaded rods and consists of a frame with removable covering plates and is thermally connected to the 'warm' stages (approx. 40 K) of both pulse-tube cryocoolers. The inner shield, hanging from the outer one on four 1/4 in stainless threaded rods, is made of 1/4 in thick Cu101 plates, and is connected to the cold stage of the colder PT415 cooler, which cools it to approx. 4–5 K. The 4 K shield has bare openings for optical and molecular access, while the optical ports in the 40 K shield are blocked with loosely attached windows to limit the buffer gas escaping into to rest of the apparatus. The cell–cryocooler thermal links are done via flexible copper braids to prevent damage from unmatched thermal expansion coefficients.

For control of cell temperature, a number of 10–25 Ω resistors are attached directly to the cell and heated directly with standard laboratory power supply, or controlled in a PID loop using the CTC100 cryogenic temperature controller (Stanford Research Systems, Sunnyvale, CA). The same controller receives temperature input from the silicon diode sensors (DT-670 from Lake Shore Cryotronics, Inc., Westerville, OH) located on the cell gas-input nozzle, cell top plate (target side), 4 K and 16 K pulse tube warm stages. The other eight sensors, recorded by the model 218 temperature monitor from Lake Shore Cryotronics, are located on the cell back snorkel, 4 K shield top plate, 40 K shield top plate, 4 K pulse tube cold head, cell top plate, 4 K shield bottom plate, 40 K shield bottom plate, and the 16 K pulse tube cold head. These eight sensors' wires are fed through the vacuum chamber using two 25-pin feedthroughs (Accu-Glass p.n. 100225), with corresponding vacuum-side PEEK female D-sub connectors (Accu-Glass p.n. 100460) for ease of disconnecting.

In addition to providing thermal isolation, the shields also serve as cryopumps, lowering the pressure from $\sim 10^{-6}$ torr (as achieved by turbomolecular pumps) to approx. $2 \cdot 10^{-8}$ torr. Pumping down from atmospheric pressure is done with nXDS 6i and 10i dry scroll pumps (Edwards Vacuum, UK) and HiPace 700M turbomolecular pumps (Pfeiffer Vacuum Technology AG, Germany). Pressure is monitored with ionization vacuum gauges (IGM401 Hornet from InstruTech LLC, Longmont, CO).

Cell windows are standard fused-silica UV-grade windows (from Thorlabs, Newton, NJ). The anti-reflect coatings at 271 nm (excited-to-ground molecular transition) and 1064 nm (ablation laser) were done by Thin Film Lab (Milford, PA). All removable mechanical connections are done by means of brass screws into threaded holes, reinforced with stainless threaded inserts (Heli-Coil). All gas-line connections are done with VCR fittings brazed onto the copper or stainless tubing. Where possible and desirable, metal-to-metal thermal conductivity has been

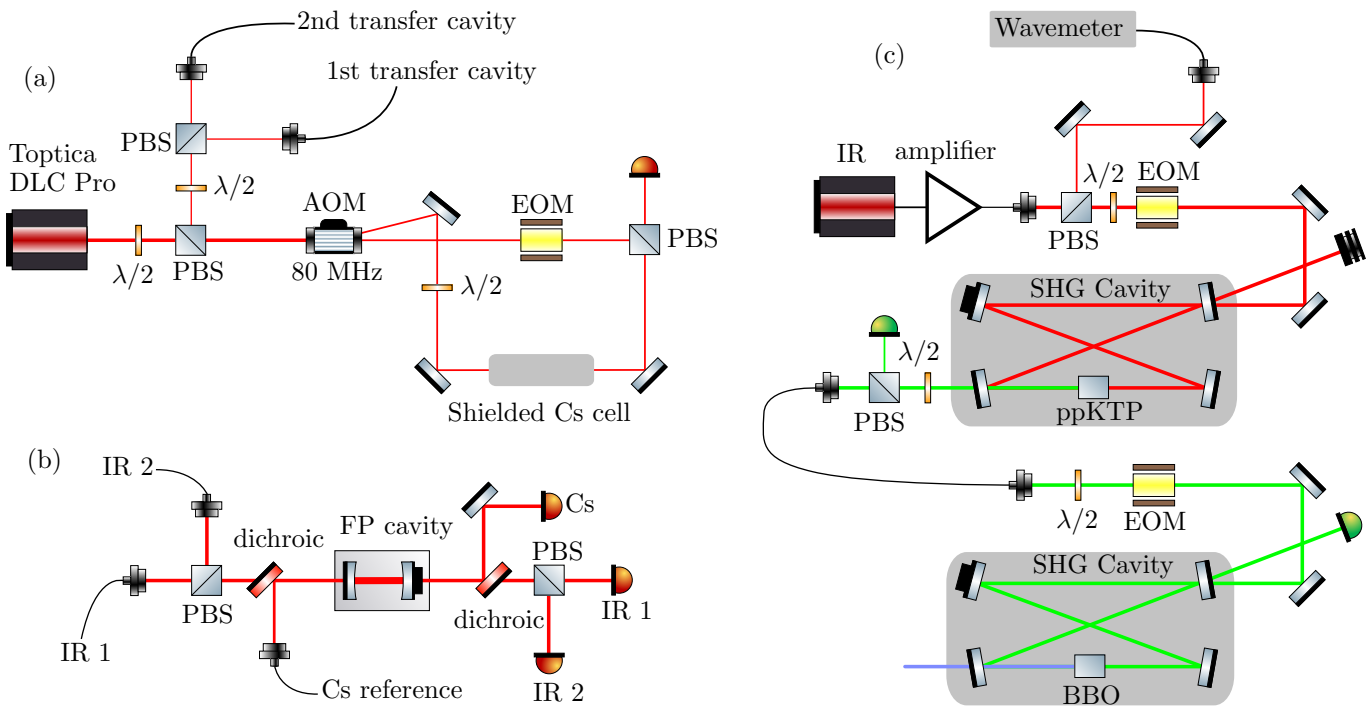

Figure 7: UV laser system (see text). ***a.*** Cs reference laser. ***b.*** Transfer scanning cavity frequency lock. ***c.*** Two-state second harmonic generation (SHG). [Drawings by O. Grasdijk]

enhanced either with indium foil, or vacuum-compatible grease (Apiezon N).

Laser system See Fig. 7 for a diagram of the UV laser system. It consists of three systems working together to (1) provide a stable cesium reference line, (2) lock an IR seed laser to the reference, and (3) to quadruple the IR into a UV beam that can be used to probe transitions in TlF, occuring around 271 nm. In order to provide separately-controllable laser frequencies, we have three SHG systems connected to two transfer lock cavities (one of them currently under construction).

Cs lock. The reference system is based on modulation transfer spectroscopy (MTS), a pump–probe technique resulting in sub-Doppler resolution for laser locking. An EOM modulates the pump beam (so as to cause sidebands to accompany the carrier frequency) before it gets passed through a vapour cell. Modulation can appear on the counterpropagating probe beam, passed through the same vapour, through the interactions of the two beams with the atomic vapour. The interactions are an example of four-wave mixing where two pump beam frequency components combine with the probe beam, resulting in a sideband for the probe beam. [53] In contrast, in frequency modulation spectroscopy (FMS) only a single modulated beam is passed through the sample and onto a detector. If the modulation frequency is large compared with the spectral feature being probed, then the laser (or EOM) can be tuned such that only one sideband interacts with the sample. In the absence of such an interaction, the RF signal arising from the beating of one sideband with the carrier cancels that arising from the other sideband. A background-free signal results When this balance is upset by phase or amplitude changes in one sideband. [54]

Following ref. [55], the beam sourced from the diode laser (DL pro 850, Toptica, Germany) is split off for transfer cavities with two polarizing beam splitters (with the two half-wave plates controlling the amount of light sent to each transfer cavity beam). The remaining beam is split by the acousto-optic modulator (AOM) (AOMO 3080-122 830NM from Gooch & Housego, UK) with 80 MHz center frequency, AR-coated for operation at 780–850 nm, into a pump and probe beam, the pump having about twice the power of the probe. (The AOM also eliminates trouble from backreflection from the Cs cell, or photodiodes.) The pump beam is phase-modulated by the custom-built EOM (Thorlabs Inc.) at 3 MHz before being led through the cesium quartz cell (Thorlabs GC19075-CS, diam. 19 mm, length 75 mm), magnetically shielded to the milligauss level in a 6 in-long, 2 in inner diam. three-layer concentric mu-metal shield (modified ZG-203 from Magnetic Shield Corporation, Bensenville, IL).

The MTS signal is detected by the photodiode (we have not found it necessary to make use of the FMS), and mixed with the EOM driving frequency to obtain an error signal used inside the laser controller (Toptica DLC pro) to

stabilize the laser diode current and the piezo-controlled cavity, and lock it to the $F = 4 \to 5$ transition in the hyperfine structure of the cesium D_2 line, occuring at 852.35641 nm [56]. However, as the Cs reference is only used to set the scale in the FSR of the transfer cavity, the choice of the hyperfine level is not important—GHz differences cause differences negligible compared to the ≈ 0.5 MHz stability required for the IR science lasers.

Transfer cavity. The Fabry–Pérot interferometer (Toptica FPI 100) with free spectral range (FSR) 1 GHz is locked to the cesium reference (master) laser. Up to two slave lasers can be used in this scheme, one for each of the two orthogonal polarizations, while the master can be distinguished by its different wavelength and separated away with a dichroic mirror. The cavity length is modulated by slighly more than one FSR to scan over the transmission peaks. The timing difference between the master and slave peaks is then fed to a PID loop to lock the slave frequency.

More details about the locking electronics once that's built and tested.

Second harmonic generation. The IR beam at 1087 nm is generated by the Koheras Basik fiber laser seed and amplified to ≈ 2 W by the Koheras Boostik Fiber Laser (both devices by NKT Photonics A/S, Denmark). A small amount of power is split off for the wavemeter (671A by Bristol Instruments, Rochester, NY), which allows for a measurement of the absolute laser frequency to within 50 MHz. The rest of the beam is modulated by an EOM and passed through a bowtie-configuration cavity (built by K. Wenz at Columbia, NY) containing a ppKTP crystal that generates up to 1 W of green light at 543.5 nm. The green beam is coupled into a fiber and delivered to a second SHG system (Toptica SHG pro) with a similar configuration. A BBO crystal is used for frequency doubling, resulting in ≈ 70 nm of UV (271.7 nm).

To counteract the cavity length changes due to temperature and pressure variations, one of the cavity mirrors is attached to a piezo actuator. Using the Pound–Drever-Hall technique (PDH), the cavity photodiode signal is mixed with the EOM driving frequency in order to extract a sensitive error signal that can be used to PID-control the piezo actuator. [57] The UV lock is done with a commercial analog setup (Toptica PDH 110, PID 100, and FALC 110), while for the green cavities we are transitioning to a home-built system, based on the Red Pitaya STEMlab FPGA board.

Rotational cooling We designed a custom aluminum vacuum chamber to allow access for the molecular beam, UV laser, and microwaves as required by the rotational cooling scheme.

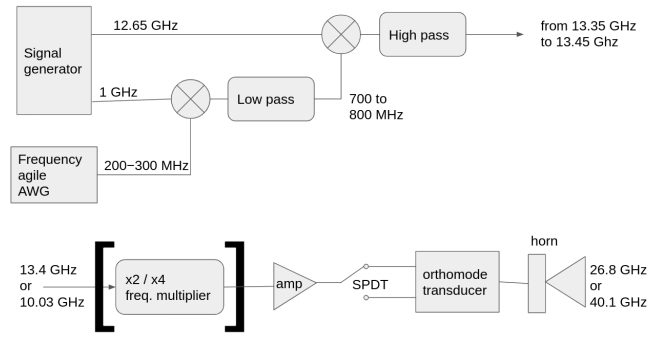

Figure 8: The principle behing frequency-agile rotational cooling microwave generation. TODO: Make labels readable.

The microwave system (see Fig. 8) is designed to provide up to three microwave beams (at frequencies 13.4, 26.8, and 40.1 GHz, and power of order 0.1–1 W), each focused with a quasioptical lens built into the transmitting antenna so as to position the beam waist in the center of the vacuum chamber. In addition, the beams can be switched between either of the two orthogonal linear polarizations at 1–2 MHz. In order to be able to separately address the hyperfine levels in the molecular ground state, the frequency can be rapidly adjusted by means of direct digital synthesis (DDS).

The ability of an RF system to resolve spectral features can be described in terms of phase noise, defined as the ratio (in decibels) of the noise in a 1 Hz bandwidth at a specified offset f_m, to the oscillator signal amplitude at frequency f_O. The maximum allowable phase noise $L_{\max}$ (in dBc/Hz) can be estimated in terms of the desired selectivity S/dB as [58, eqn. 13.50]

$$L_{\max} = C - S - I - 10\log(B),$$

where C is the desired signal level (dBm), I is the undesired (interference) signal level (dBm), and B is the bandwidth (in Hz) of the intermediate frequency. Assuming the desired (C) and undesired (I) signals are both same strength, and the signal linewidth (from molecular fly-through time) is $B \approx 10^3$ Hz, a 20 dB selectivity requires the phase noise to be smaller than -50 dBc/Hz. This requirement is satisfied by both signal sources described below.

The DDS source is AD9910 (Analog Devices Inc., Norwood, MA), outputting out to approx. $f_{\text{DDS}} = 400$ MHz. The signal is mixed with a fixed $f_0 = 1$ GHz wave generated by one of the outputs of the SynthHD Pro (WindFreak Technologies, Holiday, FL). A low pass filter removes the sum component $f_{\text{DDS}} + f_0$ and passes the difference, to be mixed with a ≈ 12.65 GHz signal from the other SynthHD output. In the second stage, a high-pass filter has to be used, passing the sum of the frequencies, since the

signal generator only goes up to 14 GHz. This also filters out a strong sub-harmonic in the high-frequency SynthHD output. (Two-stage mixing is required because of the difficulty in filtering out one of the 100 MHz sidebands from a signal exceding 10 GHz.) The resulting frequency-agile microwave signal is doubled or quadrupled if necessary, amplified, power-split with an SPTD switch, and recombined in an orthomode transducer before being led to the horn. The horns were custom engineered by Sage Millimeter (now Eravant Inc., Torrance, CA) for spot-focusing the beam energy onto the molecular beam.

State preparation 1 The design for the first state preparation region is currently under way.

Electrostatic lens Get details from Oskari

State preparation 2 The second state preparation region has not yet been designed.

Interaction region Get details from UMass

State projection and readout To be designed.

IV. PRELIMINARY MEASUREMENTS

Optical cycling for detection

TlF beam properties

Rotational cooling

Magnetic shielding

V. OUTLOOK

[1] Lev Landau. On the conservation laws for weak interactions. *Nuclear Physics*, 3(1):127–131, 1957. https://doi.org/10.1016/0029-5582(57)90061-5.

[2] EM Purcell and NF Ramsey. On the possibility of electric dipole moments for elementary particles and nuclei. *Physical Review*, 78(6):807, 1950. https://doi.org/10.1103/PhysRev.78.807.

[3] James H Christenson, Jeremiah W Cronin, Val L Fitch, and René Turlay. Evidence for the 2π decay of the K_2^0 meson. *Physical Review Letters*, 13(4):138, 1964. https://doi.org/10.1103/PhysRevLett.13.138.

[4] C. Patrignani et al. Review of Particle Physics. *Chin. Phys.*, C40(10):100001, 2016. https://doi.org/10.1088/1674-1137/40/10/100001.

[5] R. D. Peccei. CP violation: A theoretical review, 1995. https://arxiv.org/abs/hep-ph/9508389.

[6] Makoto Kobayashi and Toshihide Maskawa. CP-violation in the renormalizable theory of weak interaction. *Progress of Theoretical Physics*, 49(2):652–657, 1973. https://doi.org/10.1143/PTP.49.652.

[7] George WS Hou. Source of CP violation for the baryon asymmetry of the universe. *International Journal of Modern Physics D*, 20(08):1521–1532, 2011. https://doi.org/10.1142/S0218271811019694.

[8] Maxim Pospelov and Adam Ritz. The theta term in QCD sum rules and the electric dipole moment of the vector meson. *Nuclear physics B*, 558(1-2):243–258, 1999. https://doi.org/10.1016/S0550-3213(99)00399-5.

[9] Peter W Graham, Igor G Irastorza, Steven K Lamoreaux, Axel Lindner, and Karl A van Bibber. Experimental searches for the axion and axion-like particles. *Annual Review of Nuclear and Particle Science*, 65:485–514, 2015. https://doi.org/10.1146/annurev-nucl-102014-022120.

[10] M Eh Pospelov and IB Khriplovich. Electric dipole moment of the W boson and the electron in the Kobayashi-Maskawa model. *Yadernaya Fizika*, 53(4):1030–1033, 1991.

[11] Maxim Pospelov and Adam Ritz. Electric dipole moments as probes of new physics. *Annals of physics*, 318(1):119–169, 2005. https://doi.org/10.1016/j.aop.2005.04.002.

[12] CL Bennett, D Larson, JL Weiland, N Jarosik, G Hinshaw, N Odegard, KM Smith, RS Hill, B Gold, M Halpern, et al. Nine-year Wilkinson Microwave Anisotropy Probe (WMAP) observations: final maps and results. *The Astrophysical Journal Supplement Series*, 208(2):20, 2013. https://doi.org/10.1088/0067-0049/208/2/19.

[13] Laurent Canetti, Marco Drewes, and Mikhail Shaposhnikov. Matter and antimatter in the universe. *New J. Phys. 14 (2012) 095012*, 2012. https://doi.org/10.1088/1367-2630/14/9/095012.

[14] Andrei D Sakharov. Violation of CP invariance, C asymmetry, and baryon asymmetry of the universe. *Soviet Physics Uspekhi*, 34(5):392, 1991.

[15] Antonio Riotto and Mark Trodden. Recent progress in baryogenesis. *Annual Review of Nuclear and Particle Science*, 49(1):35–75, 1999. https://doi.org/10.1146/annurev.nucl.49.1.35.

[16] Konrad Kleinknecht and Burkhard Renk. Unitarity triangle from CP invariant quantities. *Physics Letters B*, 639(6):612–615, 2006. https://doi.org/10.1016/j.physletb.2006.07.015.

[17] Z. Fodor. Electroweak phase transitions. *Nuclear Physics B Proceedings Supplements*, 83–84:121–125, 2000. https://doi.org/10.1016/S0920-5632(00)91603-7Get.

[18] MS Safronova, D Budker, D DeMille, Derek F Jackson Kimball, A Derevianko, and Charles W Clark. Search for new physics with atoms and molecules. *Reviews of Modern Physics*, 90(2):025008, 2018. https://doi.org/10.1103/RevModPhys.90.025008.

[19] LI Schiff. Measurability of nuclear electric dipole moments. *Physical Review*, 132(5):2194, 1963. https://doi.org/10.1103/PhysRev.132.2194.

[20] OP Sushkov, VV Flambaum, and IB Khriplovich. Possibility of investigating P- and T-odd nuclear forces in atomic and molecular experiments. *Zh. Eksp. Teor. Fiz*, 87:1521, 1984.

[21] C-P Liu, MJ Ramsey-Musolf, WC Haxton, RGE Timmermans, and AEL Dieperink. Atomic electric dipole moments: The Schiff theorem and its corrections. *Physical Review C*, 76(3):035503, 2007. https://doi.org/10.1103/PhysRevC.76.035503.

[22] Kenneth S Krane, David Halliday, et al. *Introductory nuclear physics*. John Wiley & Sons, 1987.

[23] Iosif B Khriplovich and Steve K Lamoreaux. *CP violation without strangeness: electric dipole moments of particles, atoms, and molecules*. Springer, 2012.

[24] Donghyun Cho, K Sangster, and EA Hinds. Search for time-reversal-symmetry violation in thallium fluoride using a jet source. *Physical Review A*, 44(5):2783, 1991. https://doi.org/10.1103/PhysRevA.44.2783.

[25] PV Coveney and PGH Sandars. Parity-and time-violating interactions in thallium fluoride. *Journal of Physics B: Atomic and Molecular Physics*, 16(20):3727, 1983. https://doi.org/10.1088/0022-3700/16/20/009.

[26] Edward A Hinds and PGH Sandars. Experiment to search for P-and T-violating interactions in the hyperfine structure of thallium fluoride. *Physical Review A*, 21(2):480, 1980. https://doi.org/10.1103/PhysRevA.21.480.

[27] Dean A Wilkening, Norman F Ramsey, and Daniel J Larson. Search for P and T violations in the hyperfine structure of thallium fluoride. *Physical Review A*, 29(2):425, 1984. https://doi.org/10.1103/PhysRevA.29.425.

[28] D Cho, K Sangster, and EA Hinds. Tenfold improvement of limits on T violation in thallium fluoride. *Physical Review Letters*, 63(23):2559, 1989. https://doi.org/10.1103/PhysRevLett.63.2559.

[29] PGH Sandars. Measurability of the proton electric dipole moment. *Physical Review Letters*, 19(24):1396, 1967. https://doi.org/10.1103/PhysRevLett.19.1396.

[30] Norman Ramsey. *Molecular beams*, volume 20. Oxford University Press, 1956.

[31] Norman F. Ramsey. A molecular beam resonance method with separated oscillating fields. *Phys. Rev.*, 78:695–699, Jun 1950.

[32] D Schropp Jr, Donghyun Cho, T Vold, and EA Hinds. New limits on time-reversal invariance from the hyperfine structure of thallium fluoride. *Physical review letters*, 59(9):991, 1987. https://doi.org/10.1103/PhysRevLett.59.991.

[33] EB Norrgard, ER Edwards, DJ McCarron, MH Steinecker, D DeMille, Shah Saad Alam, SK Peck, NS Wadia, and LR Hunter. Hyperfine structure of the $B^3\Pi_1$ state and predictions of optical cycling behavior in the $X \to B$ transition of TlF. *Physical Review A*, 95(6):062506, 2017. https://doi.org/10.1103/PhysRevA.95.062506.

[34] JF Barry, ES Shuman, and D DeMille. A bright, slow cryogenic molecular beam source for free radicals. *Physical Chemistry Chemical Physics*, 13(42):18936–18947, 2011. https://doi.org/10.1039/C1CP20335E.

[35] Nicholas R Hutzler, Hsin-I Lu, and John M Doyle. The buffer gas beam: an intense, cold, and slow source for atoms and molecules. *Chemical reviews*, 112(9):4803–4827, 2012. https://doi.org/10.1021/cr200362u.

[36] Klaus-Peter Huber. *Molecular spectra and molecular structure: IV. Constants of diatomic molecules*. Springer Science & Business Media, 2013.

[37] HY Afeefy, JF Liebman, and SE Stein. NIST Chemistry WebBook, NIST Standard Reference Database number 69. *Linstrom PJ, Mallard WG, editors*, 2018. https://doi.org/10.18434/T4D303.

[38] John Michael Brown, John M Brown, and Alan Carrington. *Rotational spectroscopy of diatomic molecules*. Cambridge University Press, 2003.

[39] LR Hunter, SK Peck, AS Greenspon, S Saad Alam, and D DeMille. Prospects for laser cooling TlF. *Physical Review A*, 85(1):012511, 2012. https://doi.org/10.1103/PhysRevA.85.012511.

[40] GE Harrison, PGH Sandars, and SJ Wright. Experimental limit on the proton electric dipole moment. *Physical Review Letters*, 22(23):1263, 1969. https://doi.org/10.1103/PhysRevLett.22.1263.

[41] VS Malinovsky and JL Krause. General theory of population transfer by adiabatic rapid passage with intense, chirped laser pulses. *The European Physical Journal D-Atomic, Molecular, Optical and Plasma Physics*, 14(2):147–155, 2001. https://doi.org/10.1007/s100530170212.

[42] BW Shore, MV Gromovyy, LP Yatsenko, and VI Romanenko. Simple mechanical analogs of rapid adiabatic passage in atomic physics. *American Journal of Physics*, 77(12):1183–1194, 2009. https://doi.org/10.1119/1.3231688.

[43] Victoria A Cho and Richard B Bernstein. Tight focusing of beams of polar polyatomic molecules via the electrostatic hexapole lens. *The Journal of Physical Chemistry*, 95(21):8129–8136, 1991. https://doi.org/10.1021/j100174a022.

[44] HG Bennewitz, W Paul, and Ch Schlier. Fokussierung polarer moleküle. *Zeitschrift für Physik*, 141(1-2):6–15, 1955. https://doi.org/10.1007/BF01327279.

[45] Robert A Berg, Lennard Wharton, William Klemperer, Alfred Büchler, and James L Stauffer. Determination of electronic symmetry by electric deflection: LiO and LaO. *The Journal of Chemical Physics*, 43(7):2416–2421, 1965. https://doi.org/10.1063/1.1697140.

[46] William J Tango, John K Link, and Richard N Zare. Spectroscopy of K_2 using laser-induced fluorescence. *The Journal of Chemical Physics*, 49(10):4264–4268, 1968. https://doi.org/10.1063/1.1669869.

[47] Richard N Zare. My life with LIF: a personal account of developing laser-induced fluorescence. *Annual review of analytical chemistry*, 5:1–14, 2012. https://doi.org/10.1146/annurev-anchem-062011-143148.

[48] C Alden Mead. The 'noncrossing' rule for electronic potential energy surfaces: The role of time-reversal invariance. *The Journal of Chemical Physics*, 70(5):2276–2283, 1979. https://doi.org/10.1063/1.437733.

[49] Thomas Dittrich, Peter Hänggi, Gert-Ludwig Ingold, Bernhard Kramer, Gerd Schön, and Wilhelm Zwerger. *Quantum transport and dissipation*, volume 3. Wiley-Vch Weinheim, 1998.

[50] Jon H Shirley. Solution of the Schrödinger equation with a Hamiltonian periodic in time. *Physical Review*, 138(4B):B979, 1965. https://doi.org/10.1103/PhysRev.138.B979.

[51] The HDF Group. Hierarchical Data Format version 5, Mar 2018. https://doi.org/10.11578/dc.20180330.1.

[52] Moreton Moore. Symmetrical intersections of right circular cylinders. *The Mathematical Gazette*, 58(405):181–185, 1974. https://doi.org/10.2307/3615957.

[53] DJ McCarron, SA King, and SL Cornish. Modulation transfer spectroscopy in atomic rubidium. *Measurement science and technology*, 19(10):105601, 2008. https://doi.org/10.1088/0957-0233/19/10/105601.

[54] Gary C Bjorklund. Frequency-modulation spectroscopy: a new method for measuring weak absorptions and dispersions. *Optics letters*, 5(1):15–17, 1980. https://doi.org/10.1364/OL.5.000015.

[55] Fei Zi, Xuejian Wu, Weicheng Zhong, Richard H Parker, Chenghui Yu, Simon Budker, Xuanhui Lu, and Holger Müller. Laser frequency stabilization by combining modulation transfer and frequency modulation spectroscopy. *Applied optics*, 56(10):2649–2652, 2017. https://doi.org/10.1364/AO.56.002649.

[56] Daniel A Steck. Cesium D line data, 2003.

[57] RWP Drever, John L Hall, FV Kowalski, J Hough, GM Ford, AJ Munley, and H Ward. Laser phase and frequency stabilization using an optical resonator. *Applied Physics B*, 31(2):97–105, 1983. https://doi.org/10.1007/BF00702605.

[58] David M Pozar. *Microwave Engineering 3e*. Wiley, 2006.