Analog out

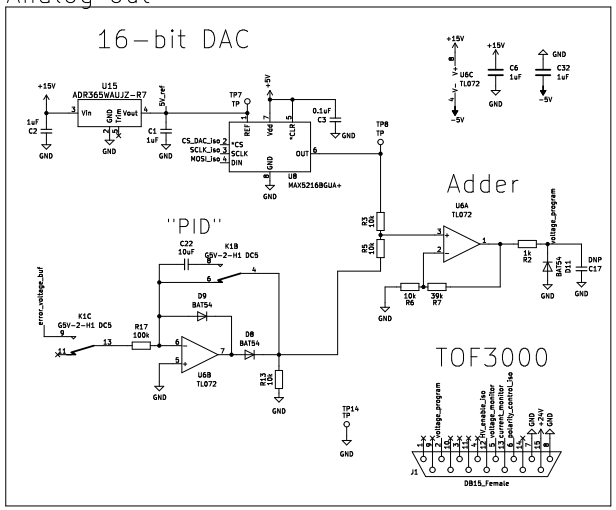

Analog in

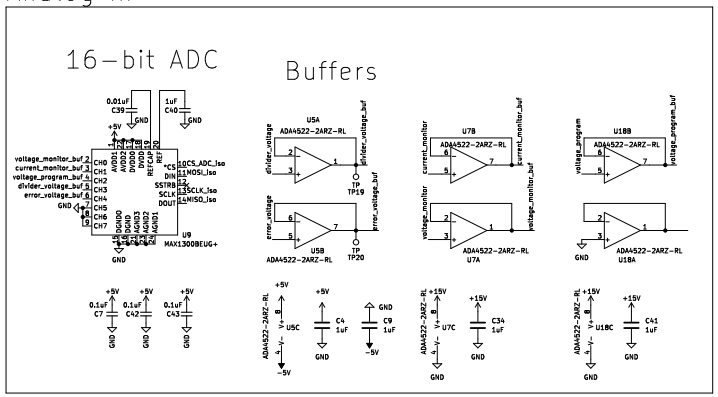

Power supply

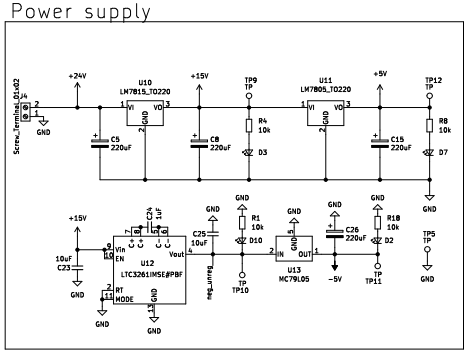

TODO:

- output buffered voltage_program
- leave space (DNP) for a lowpass RC between divider and error inamps (allow for 0603 as well as electrolytic)
- use the free opamp U18 to limit the output voltage to -10V (trimmer?)
- add resistors on TTL lines for protecting the digital isolator
- test point for voltage_program and PID_out
- for negative voltage PID, inamp input voltage is out of range with -5V supply:
  - replace MC79L05 with MC79L12
  - change -5V symbol for -12V
  - replace AD8666 with ADA4522-2ARZ-R7
- optional
  - relay for switching 24V to the TOF3000
  - screw terminal for HV_enable, polarity LED panel indicator
  - tunable PID parameters

Digital

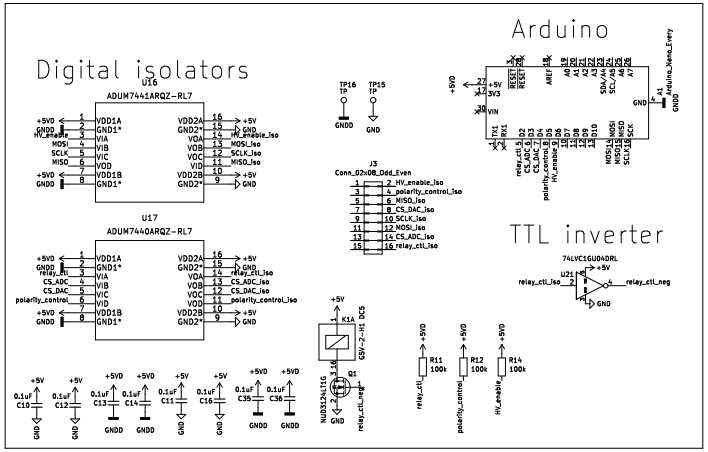
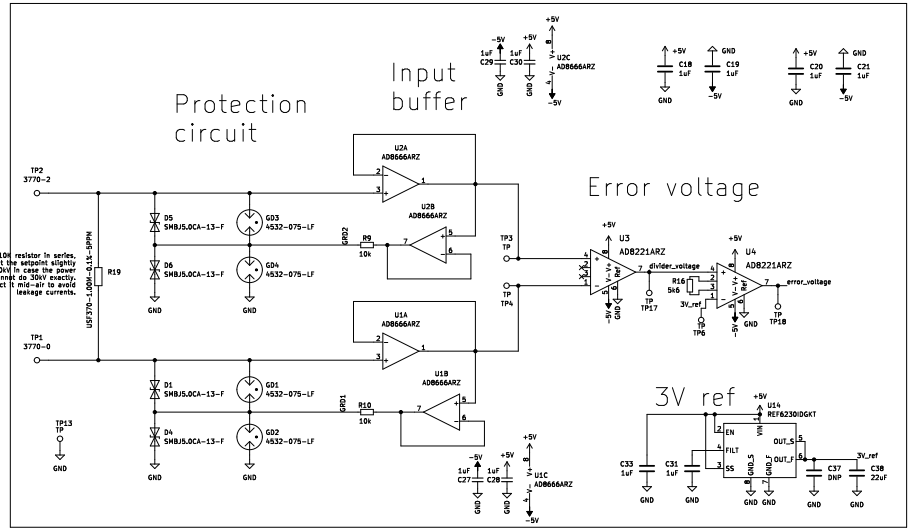
Precision analog