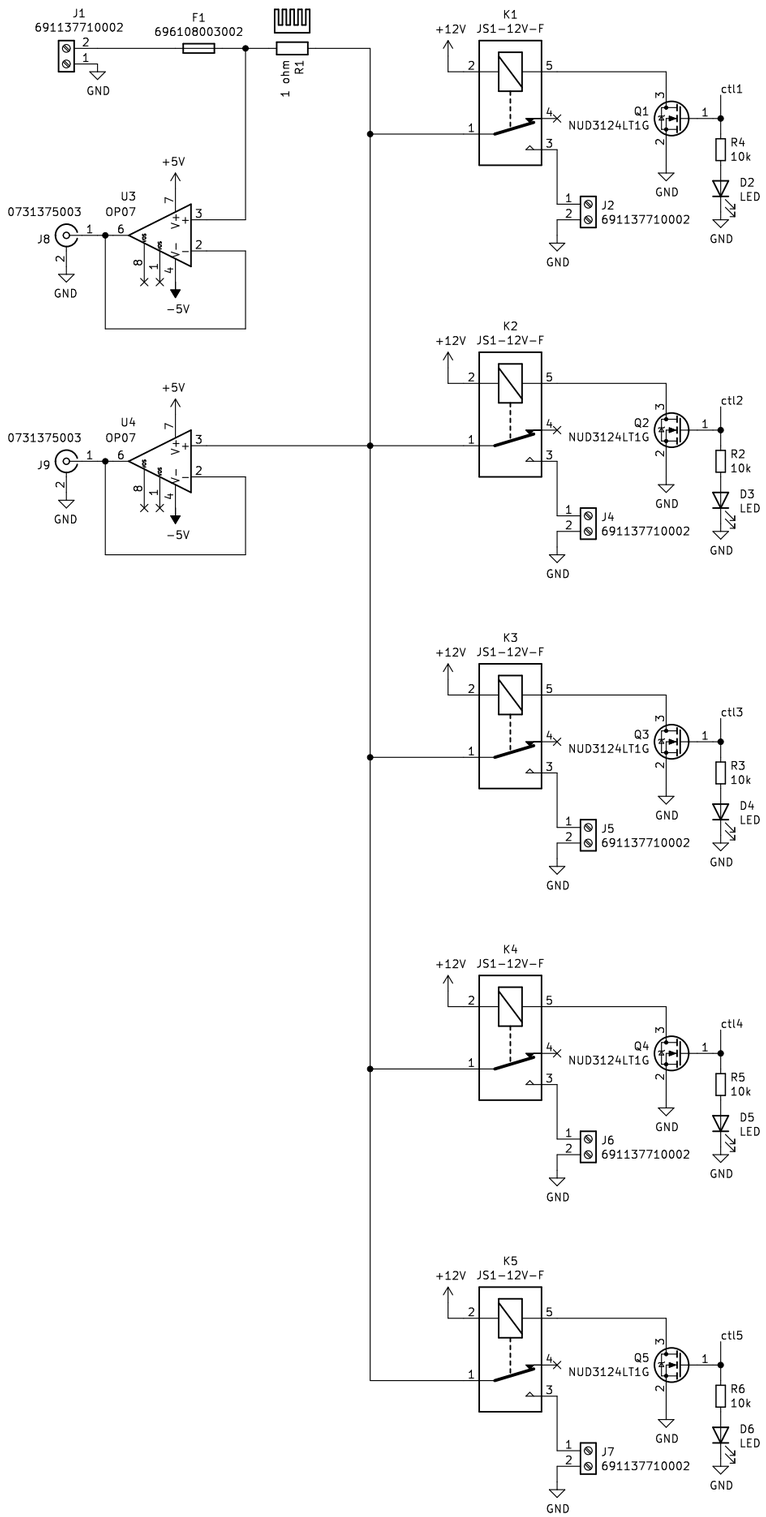

Power supply

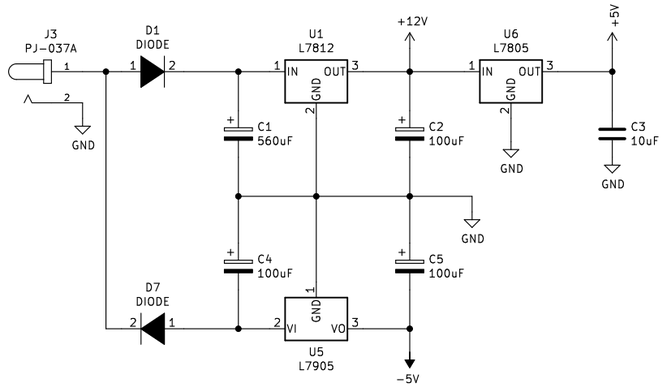

732-8949-1-ND	1	1	560 µF 35 V Aluminum Electrolytic Capacitors Radial, Can - 2000 Hrs @ 105°C
AS7805AT-E1DI-ND		1	1 Linear Voltage Regulator IC Positive Fixed 1 Output 1A TO-220-3
NCV7812BTGOS-ND	1	1	Linear Voltage Regulator IC Positive Fixed 1 Output 1A TO-220
2987-DH-20M50055-ND	1	1	USB 2.0 Cable A Male to Micro B Male 3.28' (1.00m) Shielded
WAU12-1500	1	1	12VAC 1.5A AC/AC External Wall Mount Adapter Fixed Blade Input
1050-ABX00033-ND		1	1 ATmega4809 Arduino Nano Every with Headers series AVR MCU 8-Bit Embedded Evaluation Board
732-10955-ND	6	6	2 Position Wire to Board Terminal Block Horizontal with Board 0.197" (5.00mm) Through Hole
0617004.MXP-ND	1	1	FUSE 4A 250V AXIAL
507-1547-ND	1	1	FUSE GLASS 8A 250VAC 5X20MM
NUD3124LT1GOSCT-ND	5	5	IC PWR DRVR N-CHAN 1:1 SOT23-3
696-1103-5-ND	1	1	1 Ohms ±1% 100W Through Hole Resistor TO-247-2 Current Sense, Flame Proof, Pulse Withstanding, Safety Thin Film
HS350-ND	1	1	Heat Sink TO-220 Aluminum 10.0W @ 50°C Board Level, Vertical
C503B-RBS-CW0Z0AA2CT-ND	5	5	Red 624nm LED Indication - Discrete 2.1V Radial
WM5514-ND	2	2	BNC Connector Jack, Female Socket 50Ohm Panel Mount, Through Hole, Right Angle Solder
LM7905CTNS/NOPB-ND	1	1	Linear Voltage Regulator IC Negative Fixed 1 Output 1.5A TO-220-3
505-ADUM7640ARQZ-ND	1	1	General Purpose Digital Isolator 1000Vrms 6 Channel 1Mbps 15kV/µs CMTI 20-SSOP (0.154", 3.90mm Width)
732-11376-ND	1	1	Fuse Block 20 A 250V 1 Circuit Cartridge Through Hole

Todo:

- When Arduino is not plugged to USB power, all relays are currently turned on. They should not be. ADuM7640 has default-high outputs; select a different isolator.

- When Arduino is initializing, the outputs are high-Z and the relays switch on/off at 60 Hz. Simple pulldown to ground on digital side of the isolator should do the trick.

- Use correct footprint for the 1 ohm resistor.

- Include protection for the opamps; they have a +/- 5V supply, but what happens if the input voltage is greater than that? At least, power the opamp from a +/- 12V supply.

- Include a difference/instrumentation amplifier to directly output the current as the voltage difference between the two opamp followers.

- Label all connections on silkscreen, clarify what is ground and what is signal.
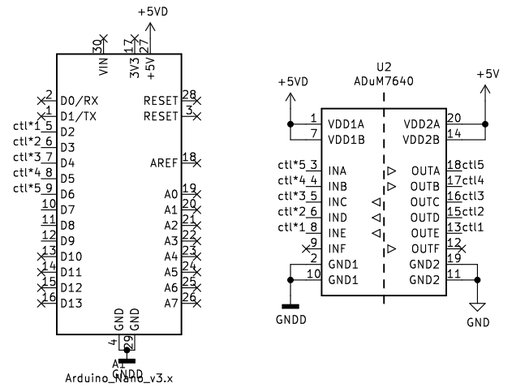
Arduino and digital isolator