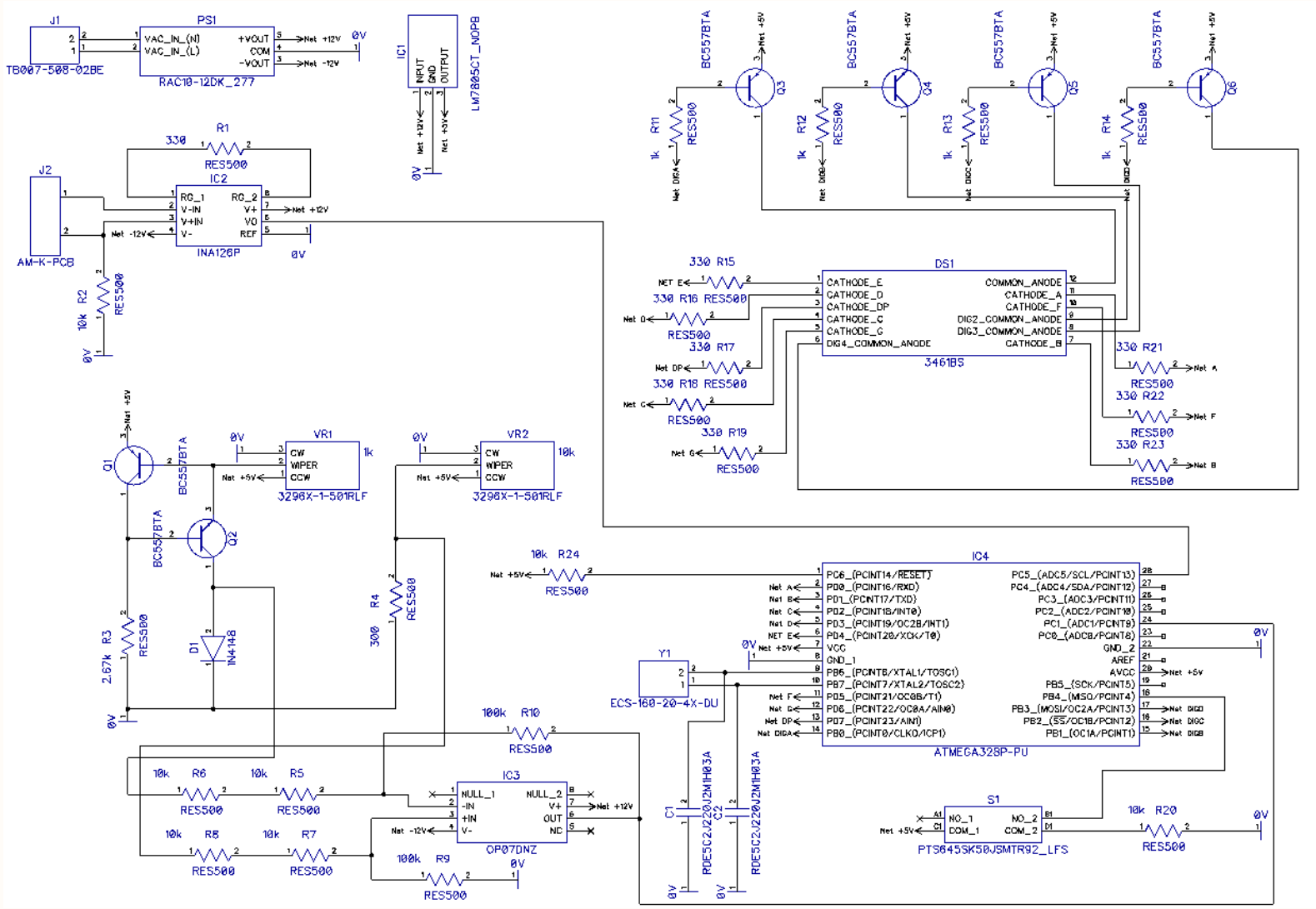

	Name	Date	Signature
Draw	Joaquín Sopena	20/11/2020	

Scale

W/S

Title

Digital Multi-Functional Thermometer

Schematic Circuit Diagram

Diagram Nº:

1