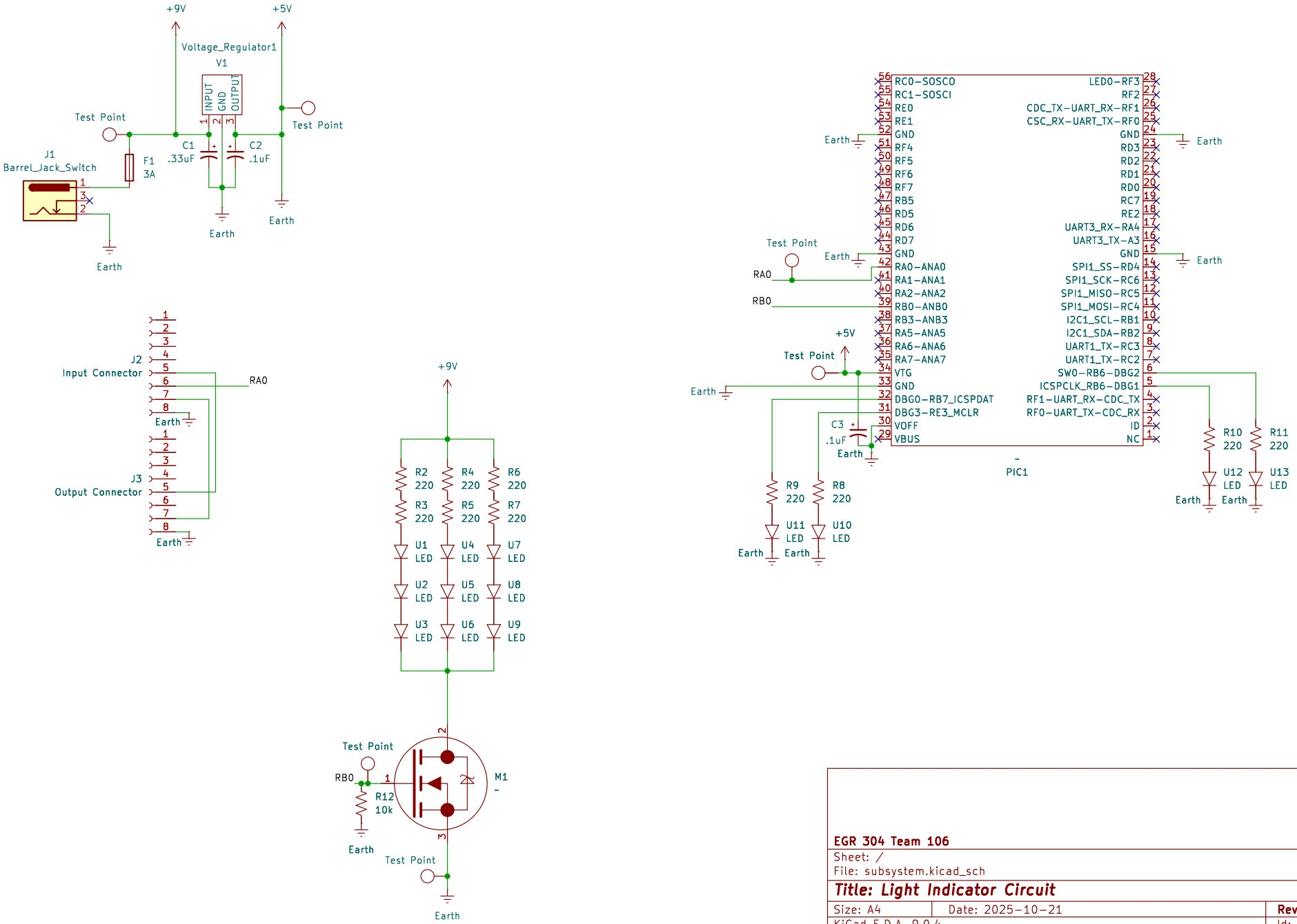

EGR 304 Team 106

Sheet: /

File: subsystem.kicad_sch

Title: Light Indicator Circuit

Size: A4	Date: 2025-10-21	**Rev: 1**
KiCad E.D.A. 9.0.4		Id: 1/1