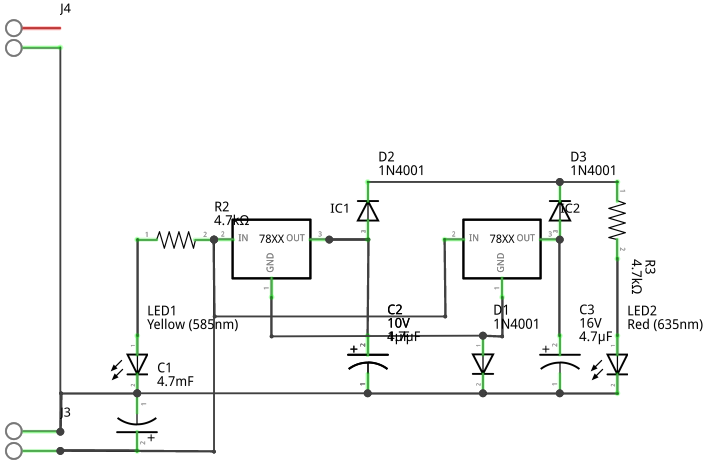
J4
D2
1N4001
D3
1N4001
R2
4.7kΩ
IC1
IC2
78XX
IN
OUT
GND
R3
4.7kΩ
LED1
Yellow (585nm)
C2
10V
4.7µF
D1
1N4001
C3
16V
4.7µF
LED2
Red (635nm)
C1
4.7mF
J3

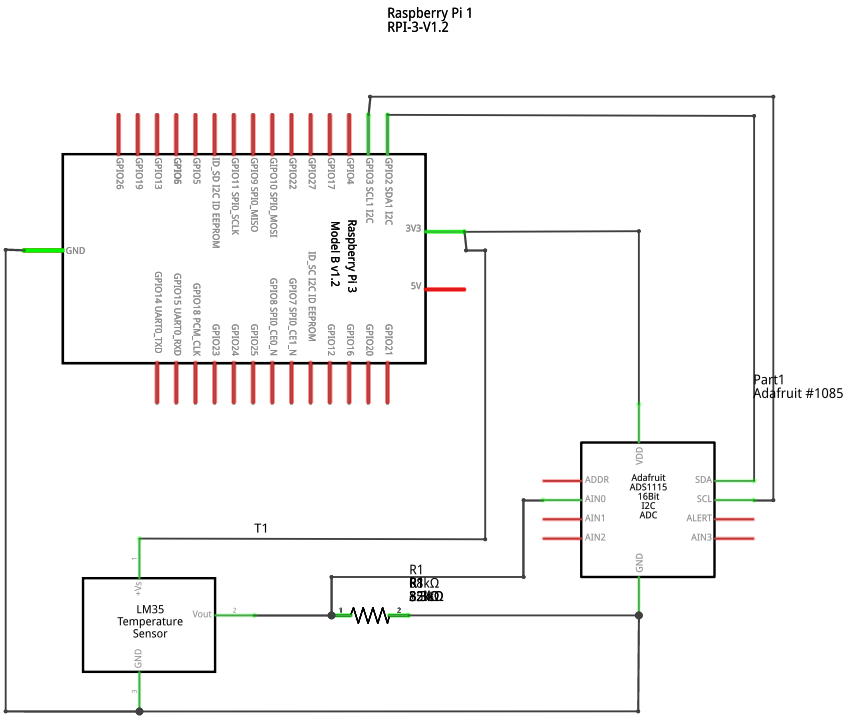
Raspberry Pi 1
RPI-3-V1.2
Raspberry Pi 3
Model B v1.2
GND
3V3
5V
Part1
Adafruit #1085
Adafruit
ADS1115
16Bit
I2C
ADC
VDD
ADDR
AIN0
AIN1
AIN2
SDA
SCL
ALERT
AIN3
T1
R1
LM35
Temperature
Sensor
Vout

fritzing