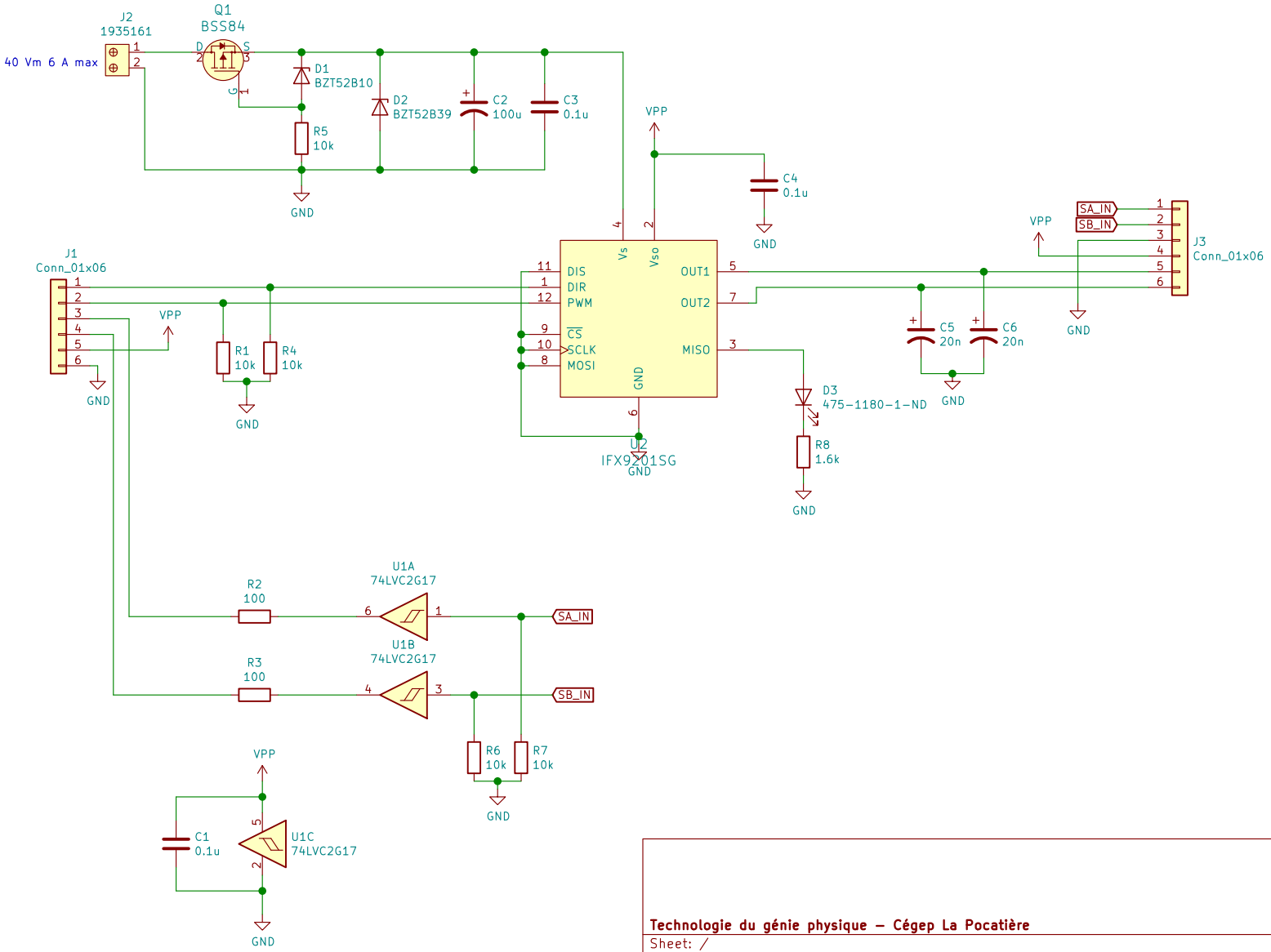

Technologie du génie physique – Cégep La Pocatière

Sheet: /

File: ifx9201sg-h-bridge-board.sch

Title: IFX9201SG H-Bridge Board

Size: USLetter	Date: 2019-04-14	**Rev: --**
KiCad E.D.A. kicad (5.1.0)-1		Id: 1/1