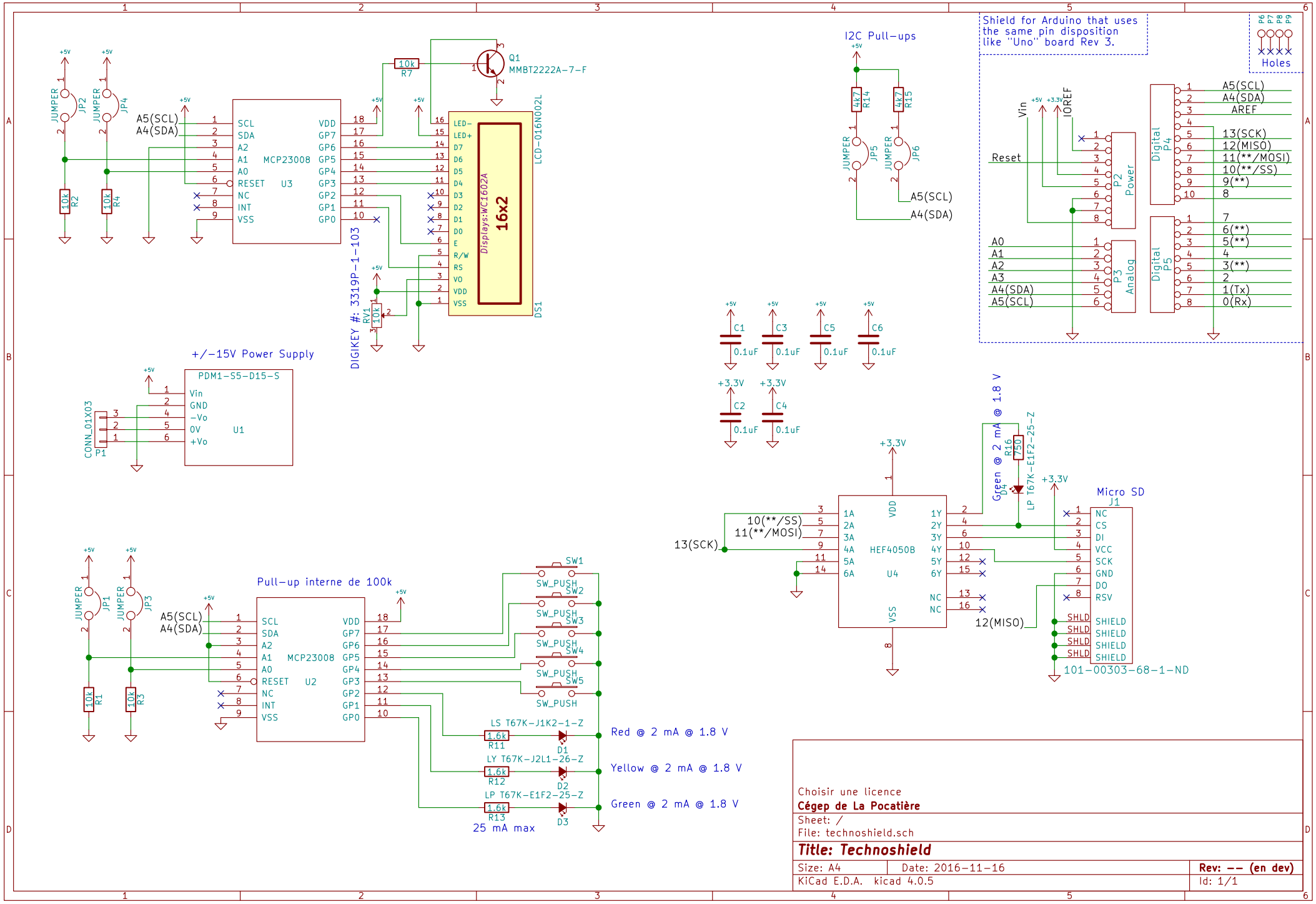
MCP23008
U3
U2
LCD-016N002L
Displays:WC1602A
16x2
DS1
DIGIKEY #: 3319P-1-103
Q1
MMBT2222A-7-F
I2C Pull-ups
Shield for Arduino that uses the same pin disposition like "Uno" board Rev 3.
Holes
+/-15V Power Supply
PDM1-S5-D15-S
U1
CONN_01X03
P1
Pull-up interne de 100k
SW_PUSH
LS T67K-J1K2-1-Z
LY T67K-J2L1-26-Z
LP T67K-E1F2-25-Z
Red @ 2 mA @ 1.8 V
Yellow @ 2 mA @ 1.8 V
Green @ 2 mA @ 1.8 V
25 mA max
HEF4050B
U4
Green @ 2 mA @ 1.8 V
Micro SD
J1
101-00303-68-1-ND
Choisir une licence
Cégep de La Pocatière
Sheet: /
File: technoshield.sch
Title: Technoshield
Size: A4
Date: 2016-11-16
Rev: -- (en dev)
KiCad E.D.A. kicad 4.0.5
Id: 1/1