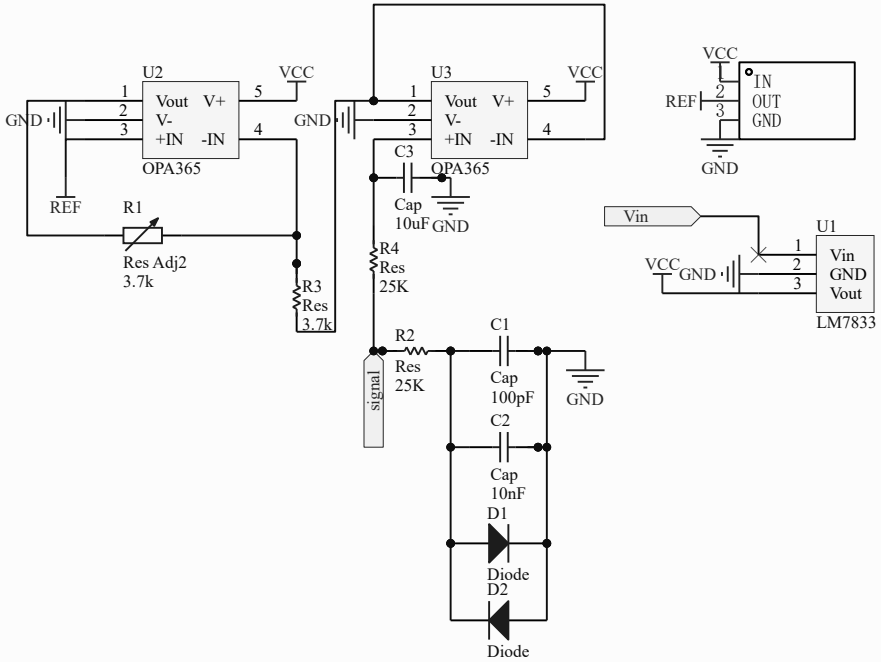

Title		
Size A4	Number	Revision
Date: 5/08/2023		Sheet of
File: C:\Users\..\Sheet3.SchDoc		Drawn By: