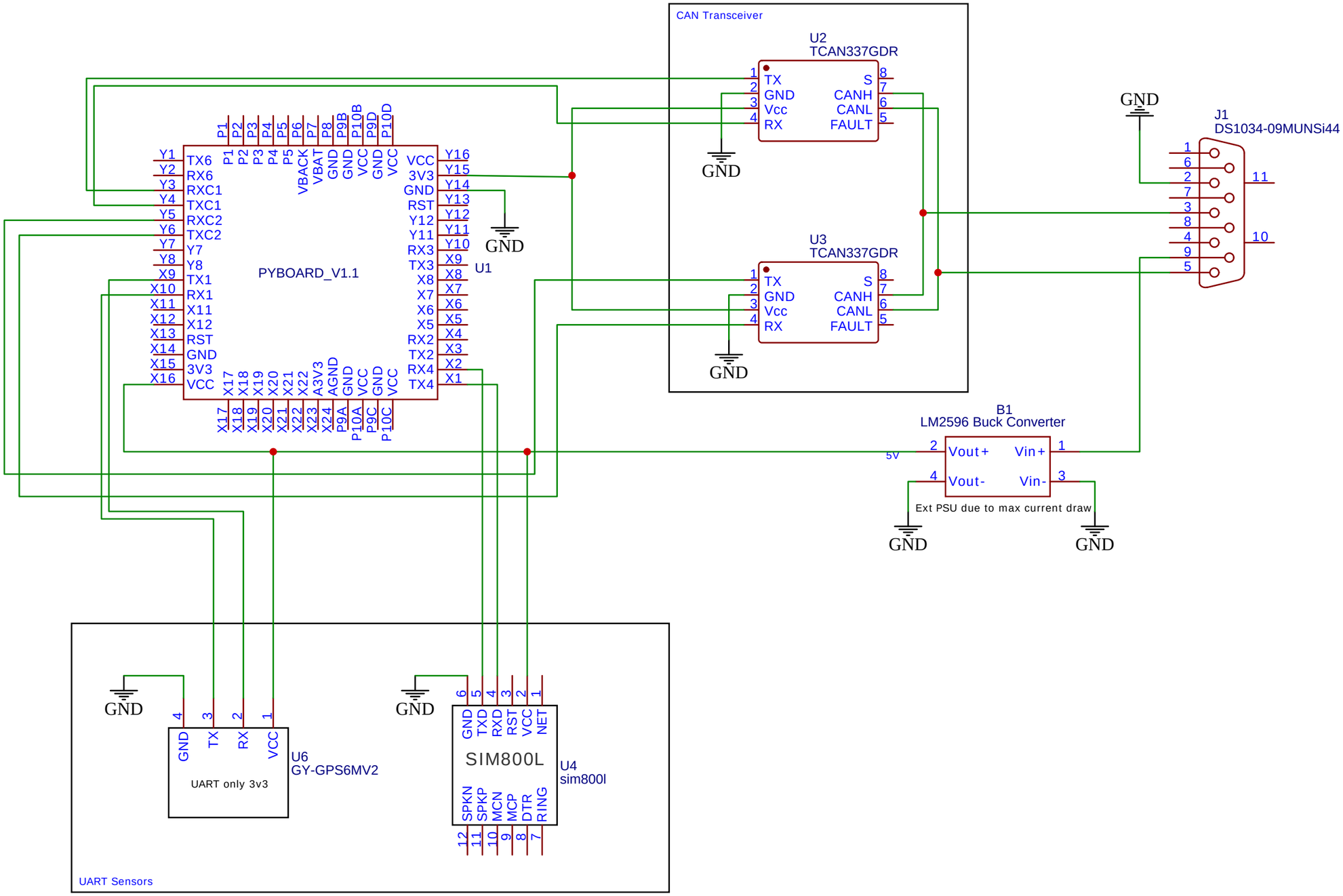

TITLE: CAN_Logger	REV: 1.0
Company:	Sheet: 1/1
Date: 2020-01-20 Drawn By: jsonnet	