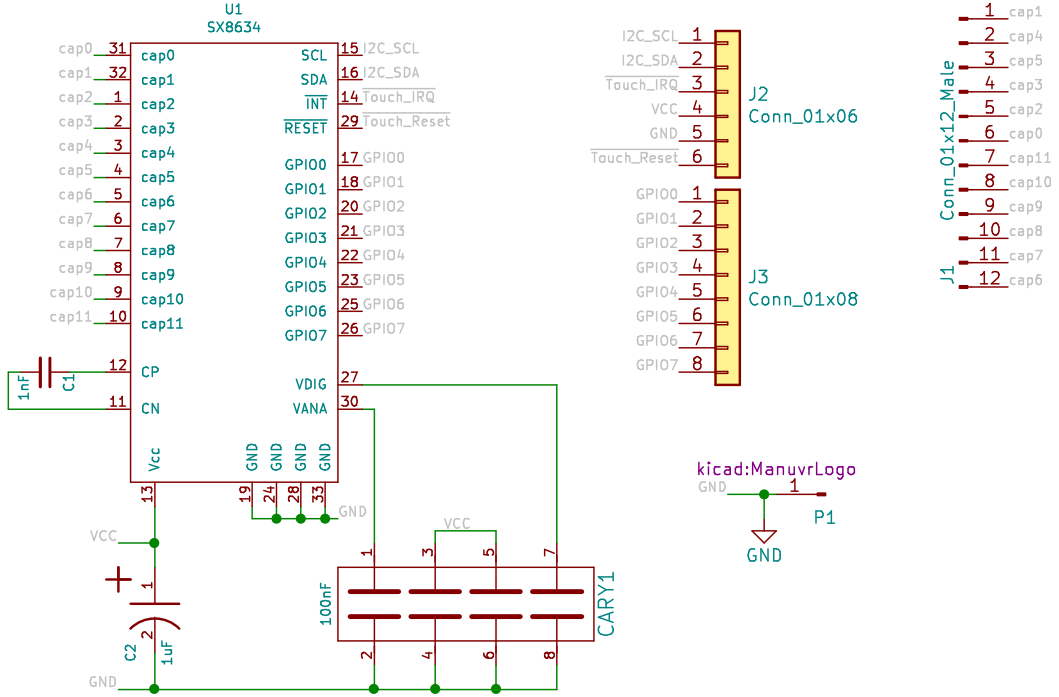

Manuvr, Inc

Sheet: /

File: SX8634-Breakout.sch

Title: SX8634-Breakout

Size: User	Date: 2019-07-11	**Rev: 1**
KiCad E.D.A. kicad 5.0.0		Id: 1/1