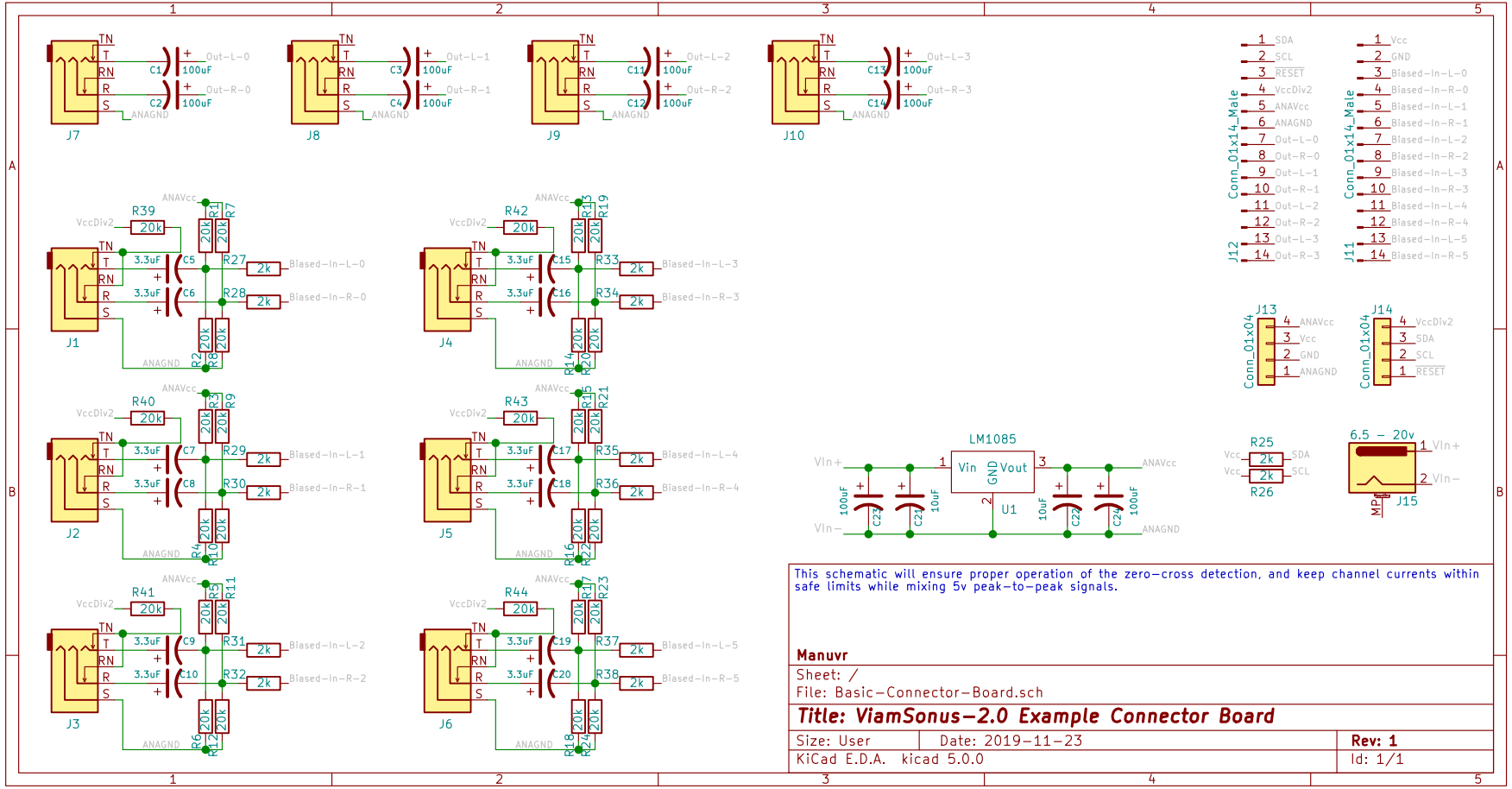

This schematic will ensure proper operation of the zero-cross detection, and keep channel currents within safe limits while mixing 5v peak-to-peak signals.

Manuvr

Sheet: /

File: Basic-Connector-Board.sch

Title: ViamSonus-2.0 Example Connector Board

Size: User	Date: 2019-11-23	**Rev: 1**
KiCad E.D.A. kicad 5.0.0		Id: 1/1