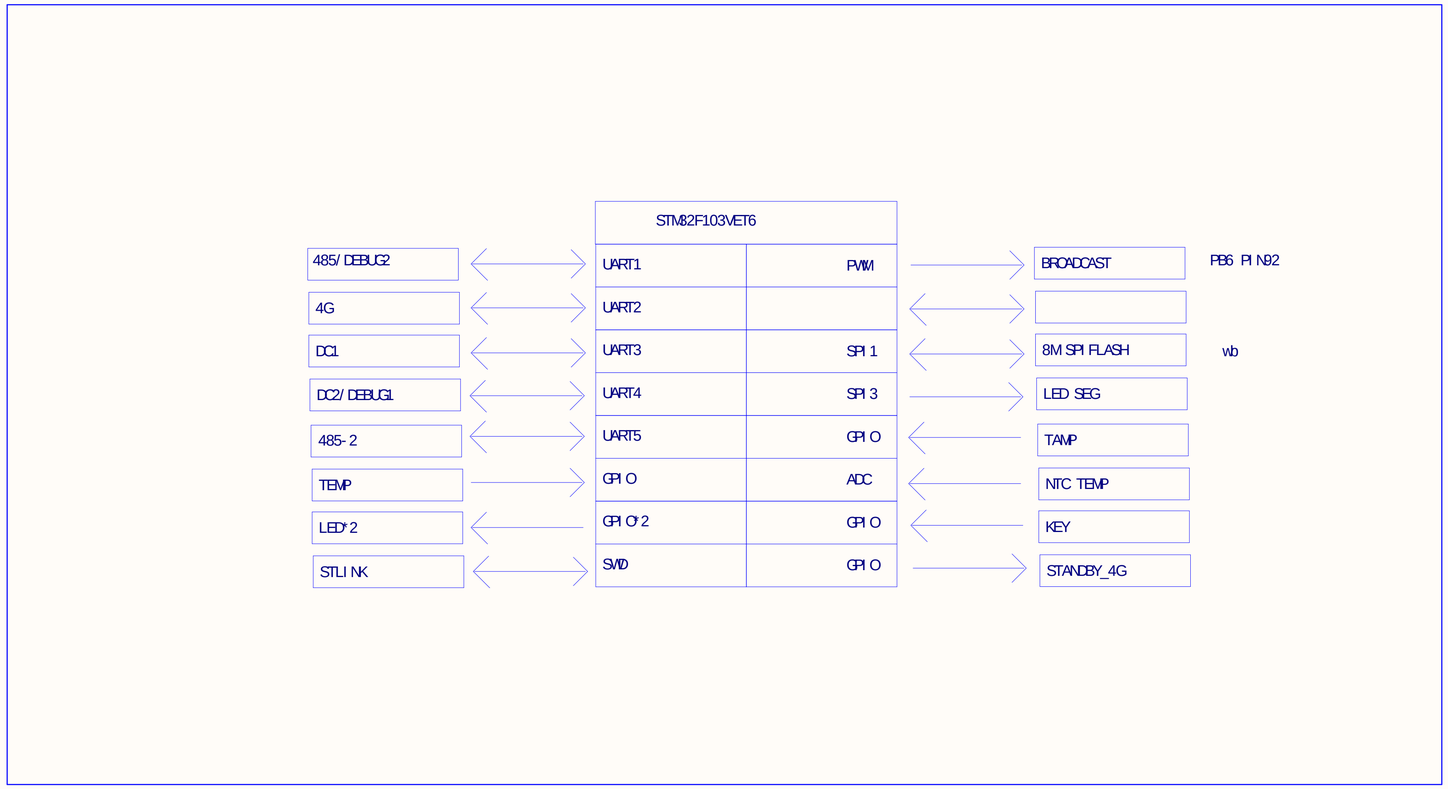

Title		
Size: A4	Number	Revision
Date: 2019/10/8		Sheet of
File: C:\Users\..\01_BLOCK_DIAGRAM.SchDoc		Drawn By:

Power Tree

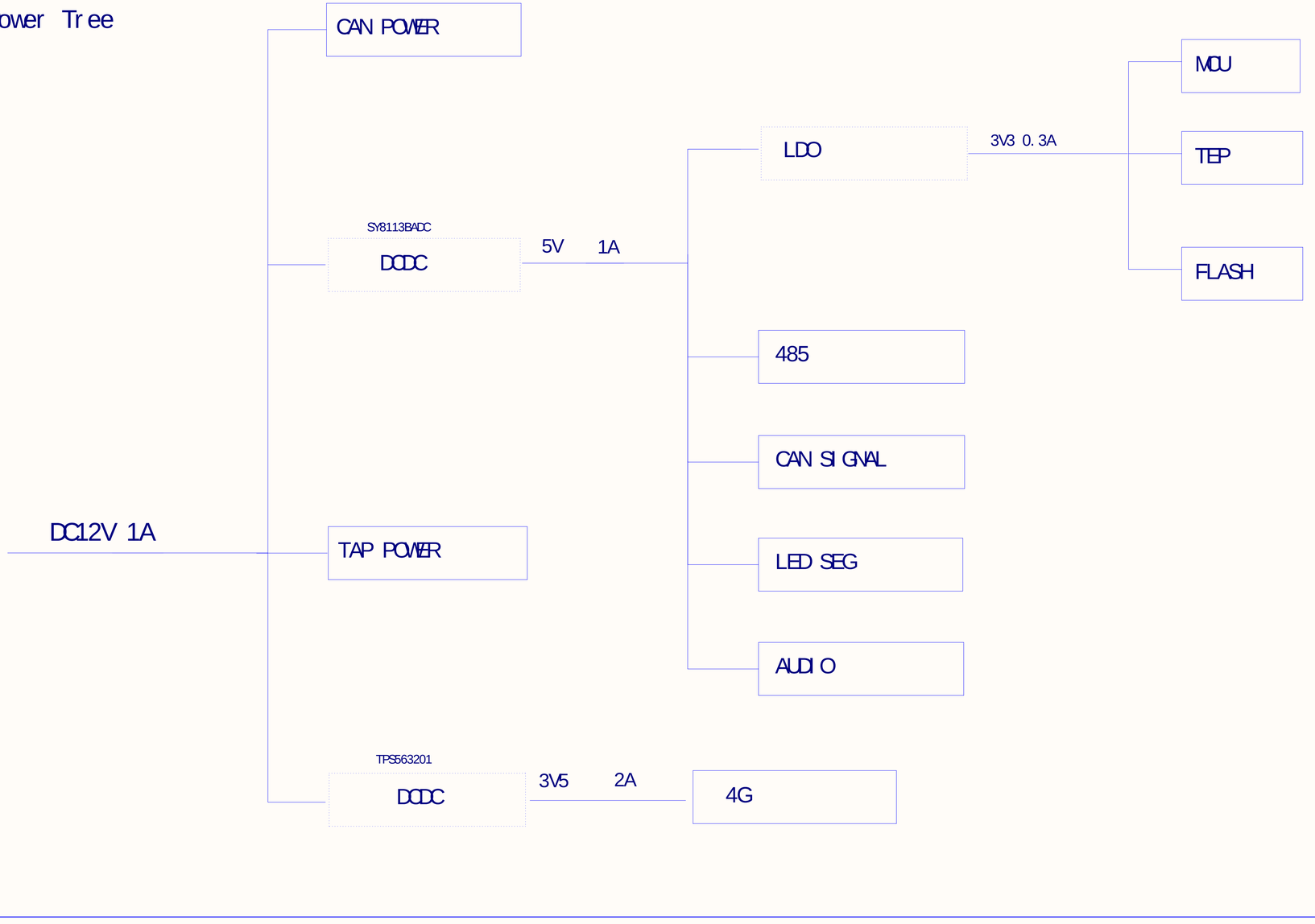

Title		
Size: A4	Number	Revision
Date: 2019/10/8		Sheet of
File: C:\Users\..\02_POWER_TREE.SchDoc		Drawn By:

POWER_IN

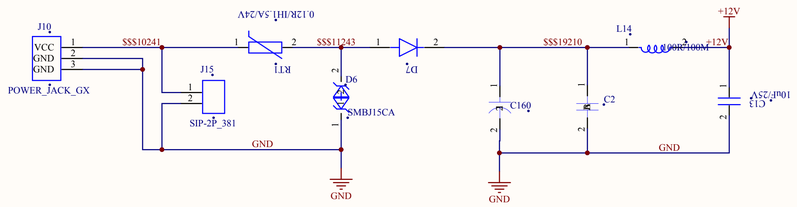

VOUT=0. 6* (R1/ R2+1)

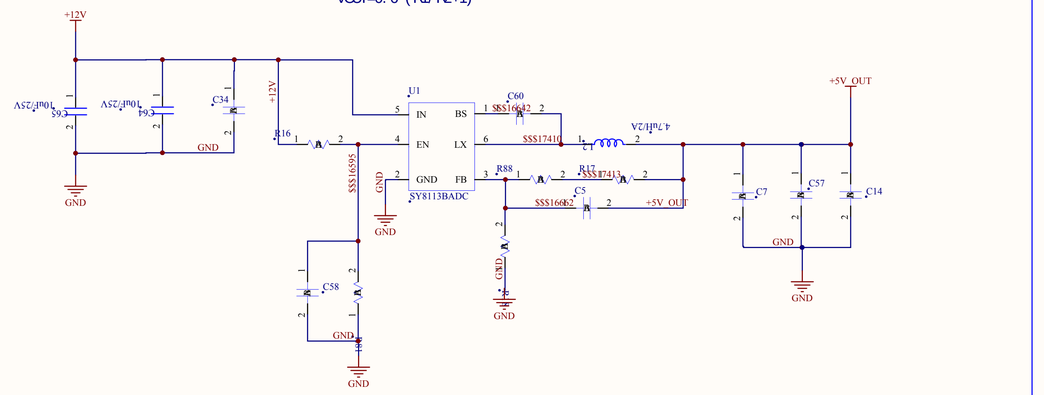

VOUT=0. 765* (1+R2/ R3)

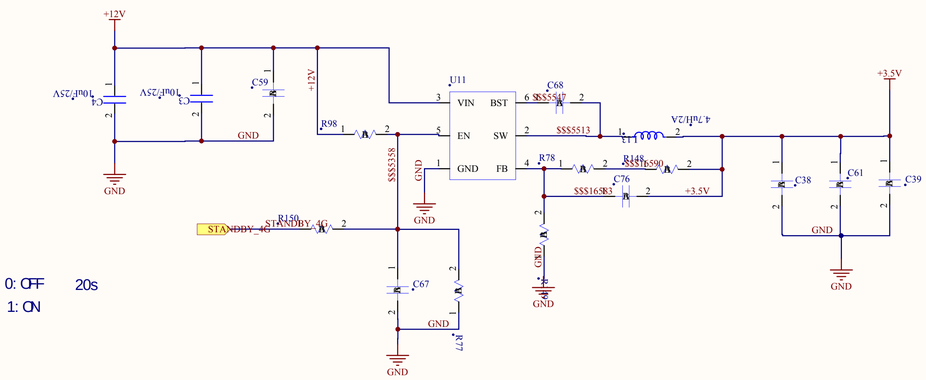

3. 3V OUTPUT POWER

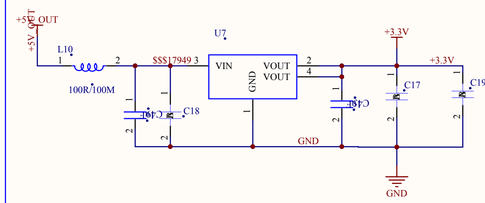

MARK4 MARK_2
MARK1 MARK_2
MARK2 MARK_2
MARK7 MARK_2
MARK5 MARK_2
MARK3 MARK_2
MARK6 MARK_2
MARK8 MARK_2

Title			
Size A4	Number		Revision
Date:	2019/10/8	Sheet of	
File:	C:\Users\..\03_POWER.SchDoc	Drawn By:	

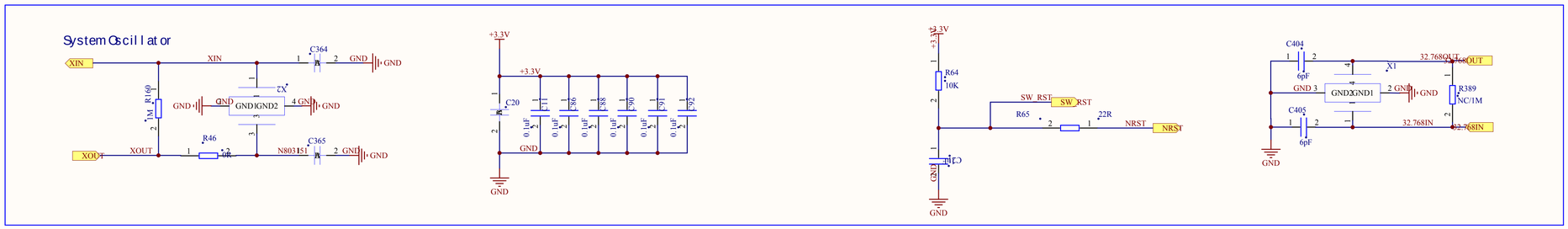
System Oscillator
XIN
XOUT
C364
C365
X2
R46
R160
GND
+3.3V
C20
C11
C86
C88
C90
C91
C92
0.1uF
R64
10K
SW_RST
R65
22R
NRST
BOOT0
C404
C405
6pF
X1
32.768OUT
32.768IN
R389
NC/1M

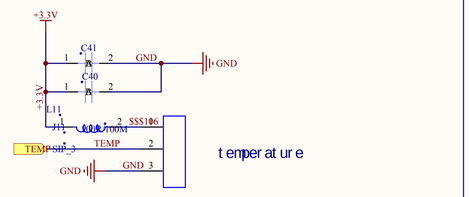
+3.3V
C41
C40
L11
600R/100M
TEMP_SHT_3
TEMP
GND_3
temperature

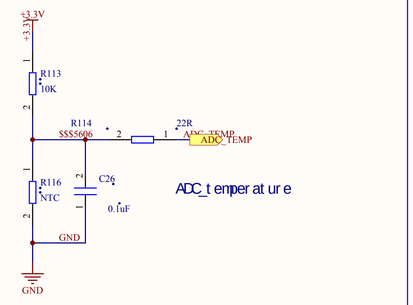
+3.3V
R113
10K
R114
22R
ADC_TEMP
R116
NTC
C26
0.1uF
GND
ADC_temperature

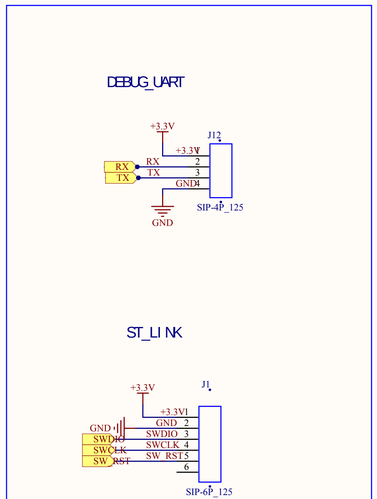
DEBUG_UART
+3.3V
J12
RX
TX
GND
SIP-4P_125
ST_LINK
J1
SWDIO
SWCLK
SW_RST
SIP-6P_125

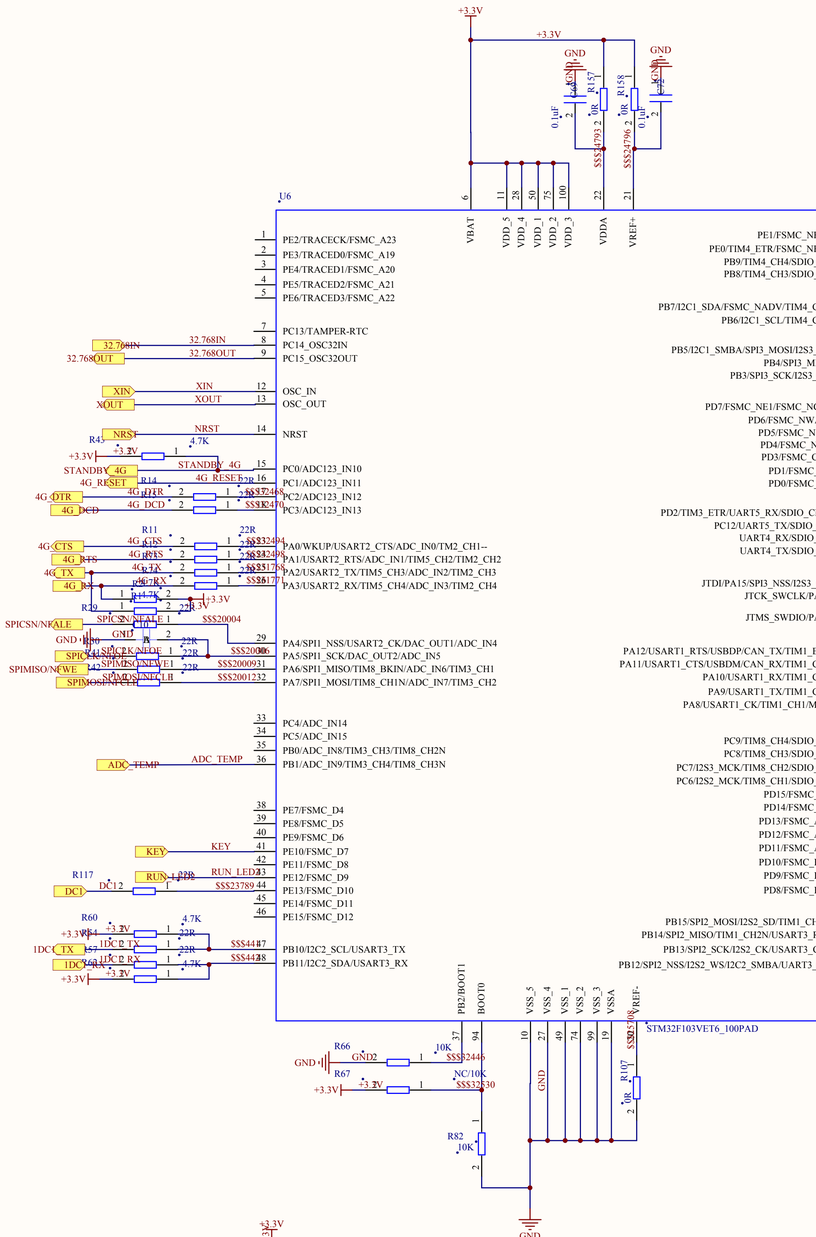
U6
VBAT
VDD_5
VDD_4
VDD_1
VDD_2
VDD_3
VDDA
VREF+
VSS_5
VSS_4
VSS_1
VSS_2
VSS_3
VSSA
VREF-
BOOT0
PB2/BOOT1
PE2/TRACECK/FSMC_A23
PE3/TRACED0/FSMC_A19
PE4/TRACED1/FSMC_A20
PE5/TRACED2/FSMC_A21
PE6/TRACED3/FSMC_A22
PC13/TAMPER-RTC
PC14_OSC32IN
PC15_OSC32OUT
OSC_IN
OSC_OUT
NRST
PC0/ADC123_IN10
PC1/ADC123_IN11
PC2/ADC123_IN12
PC3/ADC123_IN13
PA0/WKUP/USART2_CTS/ADC_IN0/TM2_CH1--
PA1/USART2_RTS/ADC_IN1/TIM5_CH2/TIM2_CH2
PA2/USART2_TX/TIM5_CH3/ADC_IN2/TIM2_CH3
PA3/USART2_RX/TIM5_CH4/ADC_IN3/TIM2_CH4
PA4/SPI1_NSS/USART2_CK/DAC_OUT1/ADC_IN4
PA5/SPI1_SCK/DAC_OUT2/ADC_IN5
PA6/SPI1_MISO/TIM8_BKIN/ADC_IN6/TIM3_CH1
PA7/SPI1_MOSI/TIM8_CH1N/ADC_IN7/TIM3_CH2
PC4/ADC_IN14
PC5/ADC_IN15
PB0/ADC_IN8/TIM3_CH3/TIM8_CH2N
PB1/ADC_IN9/TIM3_CH4/TIM8_CH3N
PE7/FSMC_D4
PE8/FSMC_D5
PE9/FSMC_D6
PE10/FSMC_D7
PE11/FSMC_D8
PE12/FSMC_D9
PE13/FSMC_D10
PE14/FSMC_D11
PE15/FSMC_D12
PB10/I2C2_SCL/USART3_TX
PB11/I2C2_SDA/USART3_RX
STM32F103VET6_100PAD
PE1/FSMC_NBL1
PE0/TIM4_ETR/FSMC_NBL0
PB9/TIM4_CH4/SDIO_D5
PB8/TIM4_CH3/SDIO_D4
PB7/I2C1_SDA/FSMC_NADV/TIM4_CH2
PB6/I2C1_SCL/TIM4_CH1
PB5/I2C1_SMBA/SPI3_MOSI/I2S3_SD
PB4/SPI3_MISO
PB3/SPI3_SCK/I2S3_CK
PD7/FSMC_NE1/FSMC_NCE2
PD6/FSMC_NWAIT
PD5/FSMC_NWE
PD4/FSMC_NOE
PD3/FSMC_CLK
PD1/FSMC_D3
PD0/FSMC_D2
PD2/TIM3_ETR/UART5_RX/SDIO_CMD
PC12/UART5_TX/SDIO_CK
UART4_RX/SDIO_D3
UART4_TX/SDIO_D2
JTDI/PA15/SPI3_NSS/I2S3_WS
JTCK_SWCLK/PA14
NC
JTMS_SWDIO/PA13
PA12/USART1_RTS/USBDP/CAN_TX/TIM1_ETR
PA11/USART1_CTS/USBDM/CAN_RX/TIM1_CH4
PA10/USART1_RX/TIM1_CH3
PA9/USART1_TX/TIM1_CH2
PA8/USART1_CK/TIM1_CH1/MCO
PC9/TIM8_CH4/SDIO_D1
PC8/TIM8_CH3/SDIO_D0
PC7/I2S3_MCK/TIM8_CH2/SDIO_D7
PC6/I2S2_MCK/TIM8_CH1/SDIO_D6
PD15/FSMC_D1
PD14/FSMC_D0
PD13/FSMC_A18
PD12/FSMC_A17
PD11/FSMC_A16
PD10/FSMC_D15
PD9/FSMC_D14
PD8/FSMC_D13
PB15/SPI2_MOSI/I2S2_SD/TIM1_CH3N
PB14/SPI2_MISO/TIM1_CH2N/USART3_RTS
PB13/SPI2_SCK/I2S2_CK/USART3_CTS
PB12/SPI2_NSS/I2S2_WS/I2C2_SMBA/UART3_CK
test point
TAMPER_IN2
LED_STB4_1
LED_STB3_1
LED_STB2_1
LED_STB1_1
LED_MOSI_1
LED_SCK_1
EN_AUDIO
PWM_AUDIO
RS485_W/RN
RS485_RX
RS485_TX
SWCLK
SWDIO
1DC1_TX
1DC1_RX
2DC2_TX
2DC2_RX
ADC_TEMP
KEY
RUN_LED2
DC1
DC2
GND
+3.3V
+5V_DC1
+5V_DC2

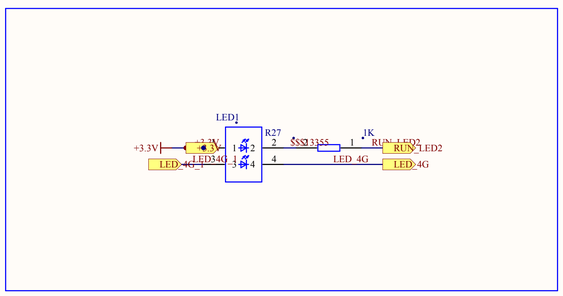
LED1
R27
1K
RUN_LED2
LED_4G
LED3404

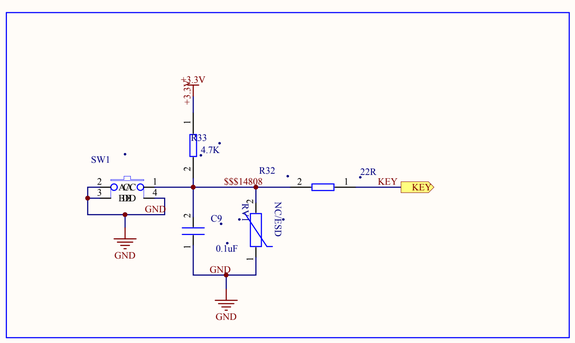
SW1
R33
4.7K
R32
22R
KEY
C9
0.1uF
NC/10K
GND
+3.3V

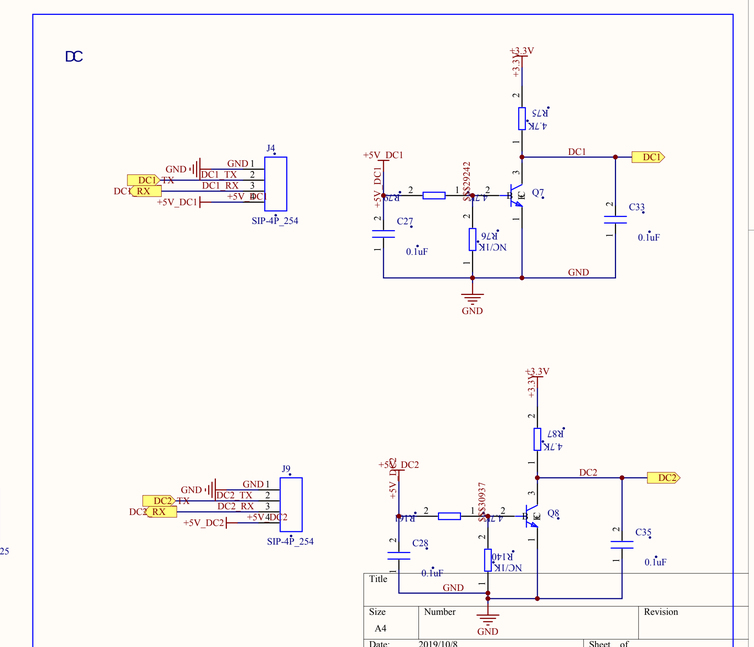
DC
J4
SIP-4P_254
R75
4.7K
Q7
C27
C33
0.1uF
R76
NC/1M
J9
Q8
C28
C35
R87
R88
R89
R90
NC/1K
Title
Size
A4
Number
Revision
Date:
2019/10/8
Sheet of
File:
C:\Users\..\04_STM32F103VET6.SchDoc
Drawn By:

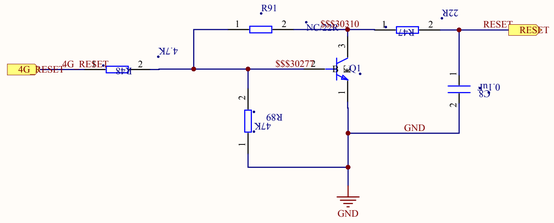

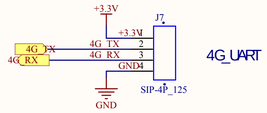

4G_UART

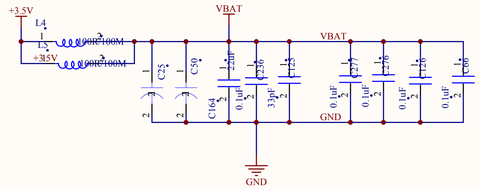

NC

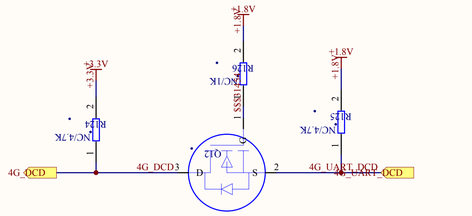

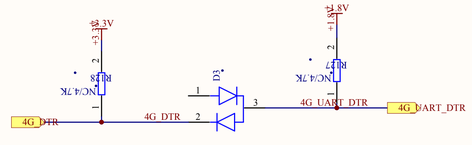

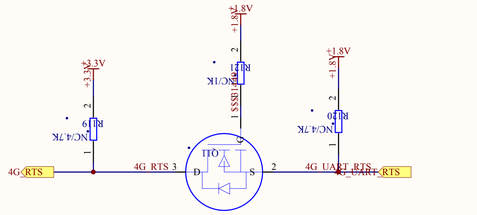

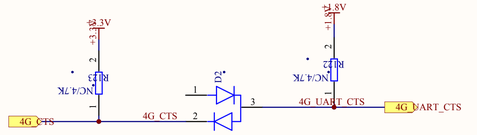

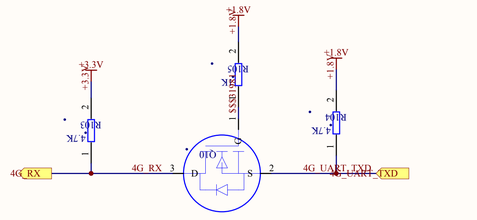

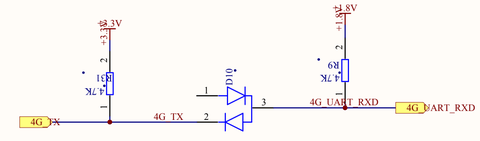

SIM_CARD

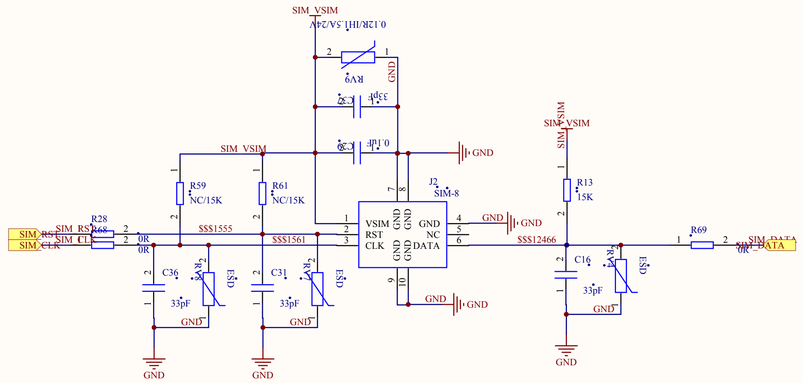

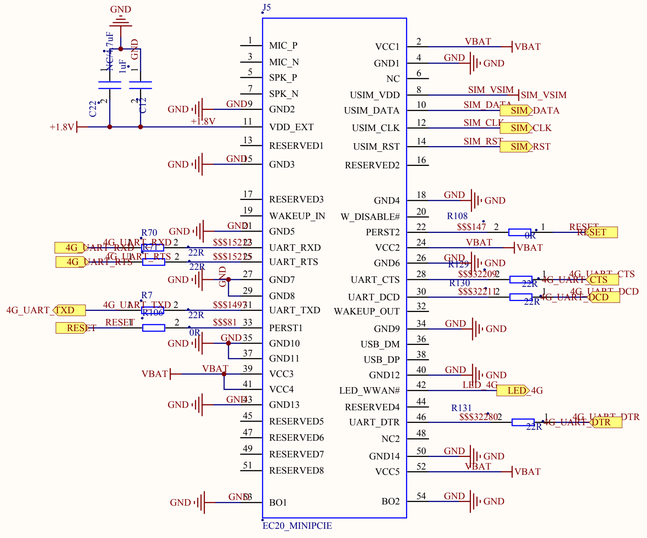

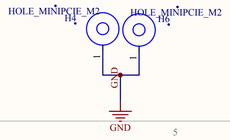

Title		
Size: A4	Number	Revision
Date: 2019/10/8		Sheet of
File: C:\Users\...\05_4G.SchDoc		Drawn By:

AUDIO

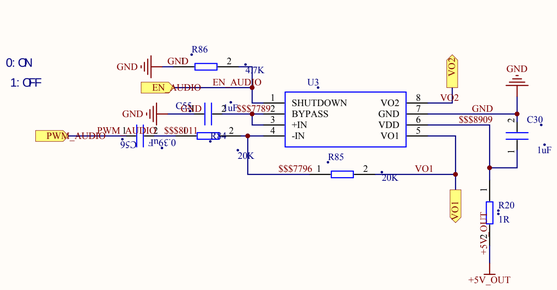

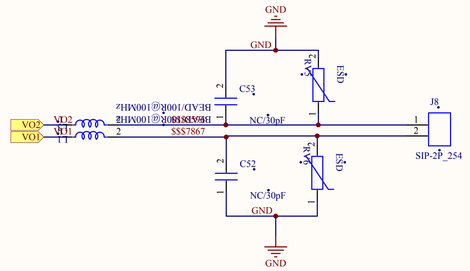

Title			
Size	Number		Revision
A4			
Date:	2019/10/8	Sheet of	
File:	C:\Users\..\06_AUDIO.SchDoc	Drawn By:	

485-1

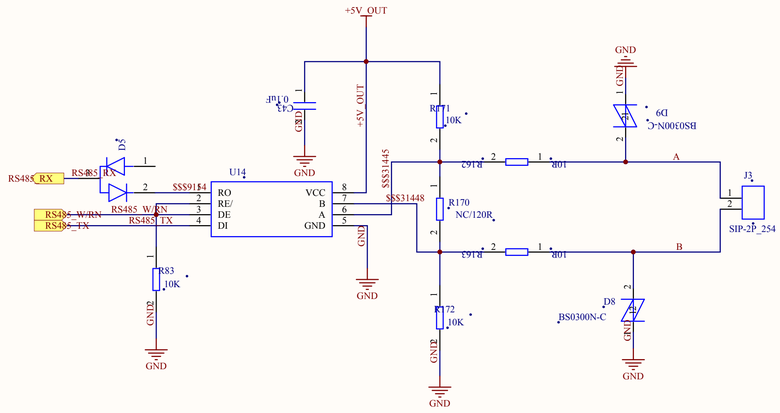

Title			
Size	Number		Revision
A4			
Date:	2019/10/8	Sheet of	
File:	C:\Users\..\07_485-1.SchDoc	Drawn By:	

SPI_FLASH

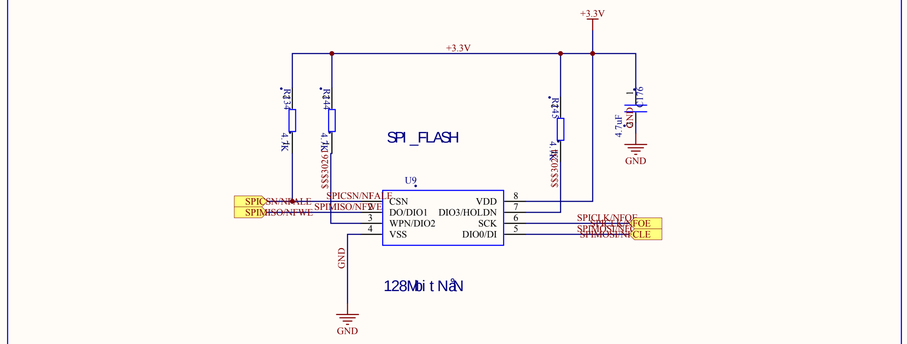

Title			
Size	Number		Revision
A4			
Date:	2019/10/8	Sheet of	
File:	C:\Users\..\08_SPIFLASH.SchDoc	Drawn By:	

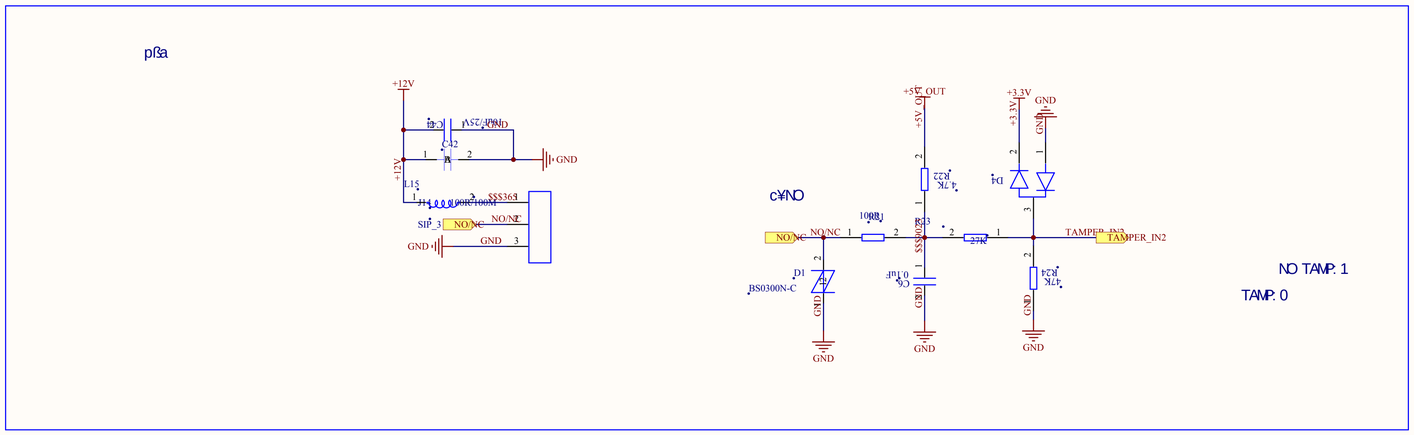

Title		
Size A4	Number	Revision
Date: 2019/10/8		Sheet of
File: C:\Users\..\09_TAMPER.SchDoc		Drawn By:

LED_SEG

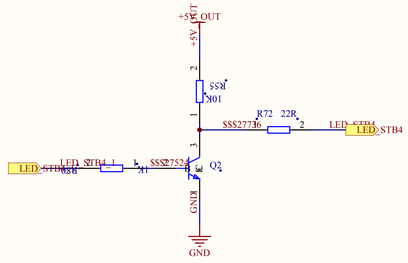

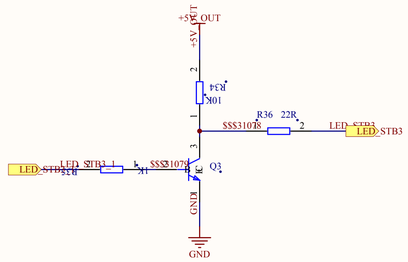

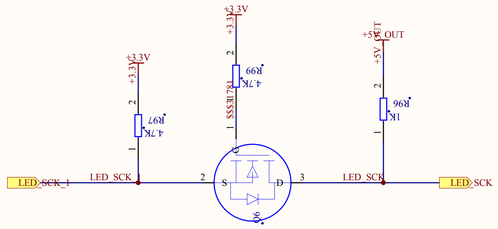

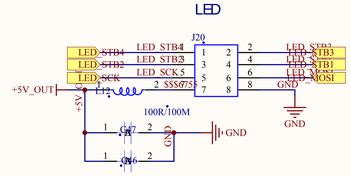

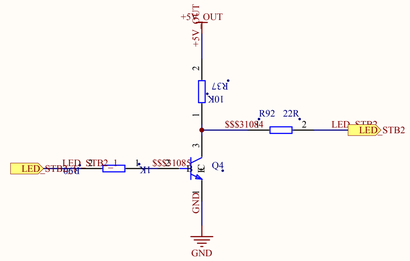

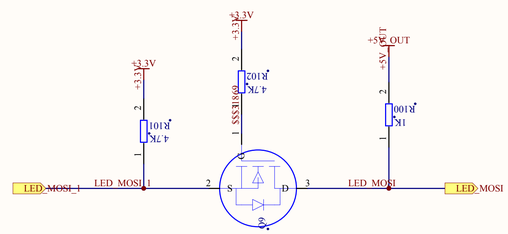

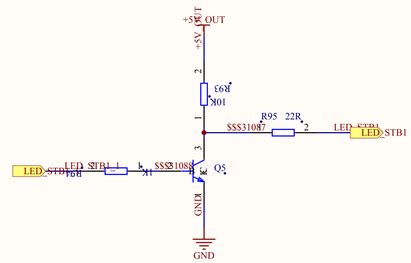

Title			
Size	Number		Revision
A4			
Date:	2019/10/8	Sheet of	
File:	C:\Users\..\10_LED_SEG.SchDoc	Drawn By:	

485- 2

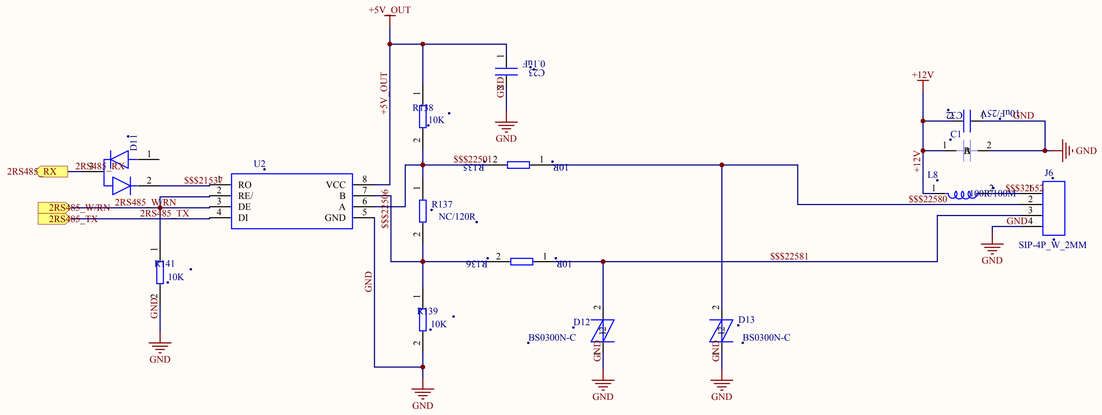

Title			
Size	Number		Revision
A4			
Date:	2019/10/8	Sheet of	
File:	C:\Users\..\11_485-2.SchDoc	Drawn By:	

2019. 06. 20	V1. 00	™ґH

Title		
Size A4	Number	Revision
Date:	2019/10/8	Sheet of
File:	C:\Users\..\12_HISTORY.SchDoc	Drawn By: