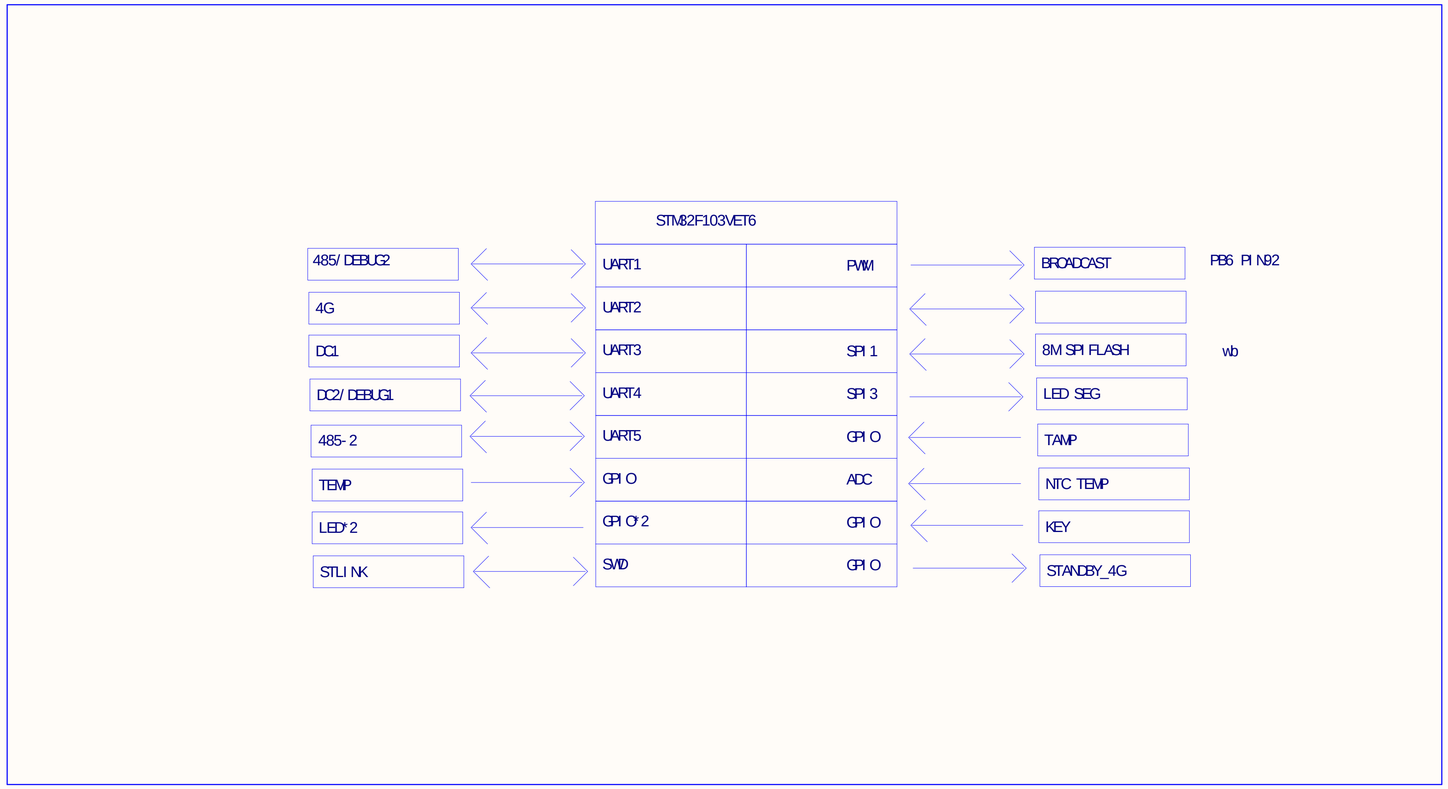

Title		
Size: A4	Number	Revision
Date: 2019/8/13		Sheet of
File: C:\Users\..\01_BLOCK_DIAGRAM.SchDoc		Drawn By:

Power Tree

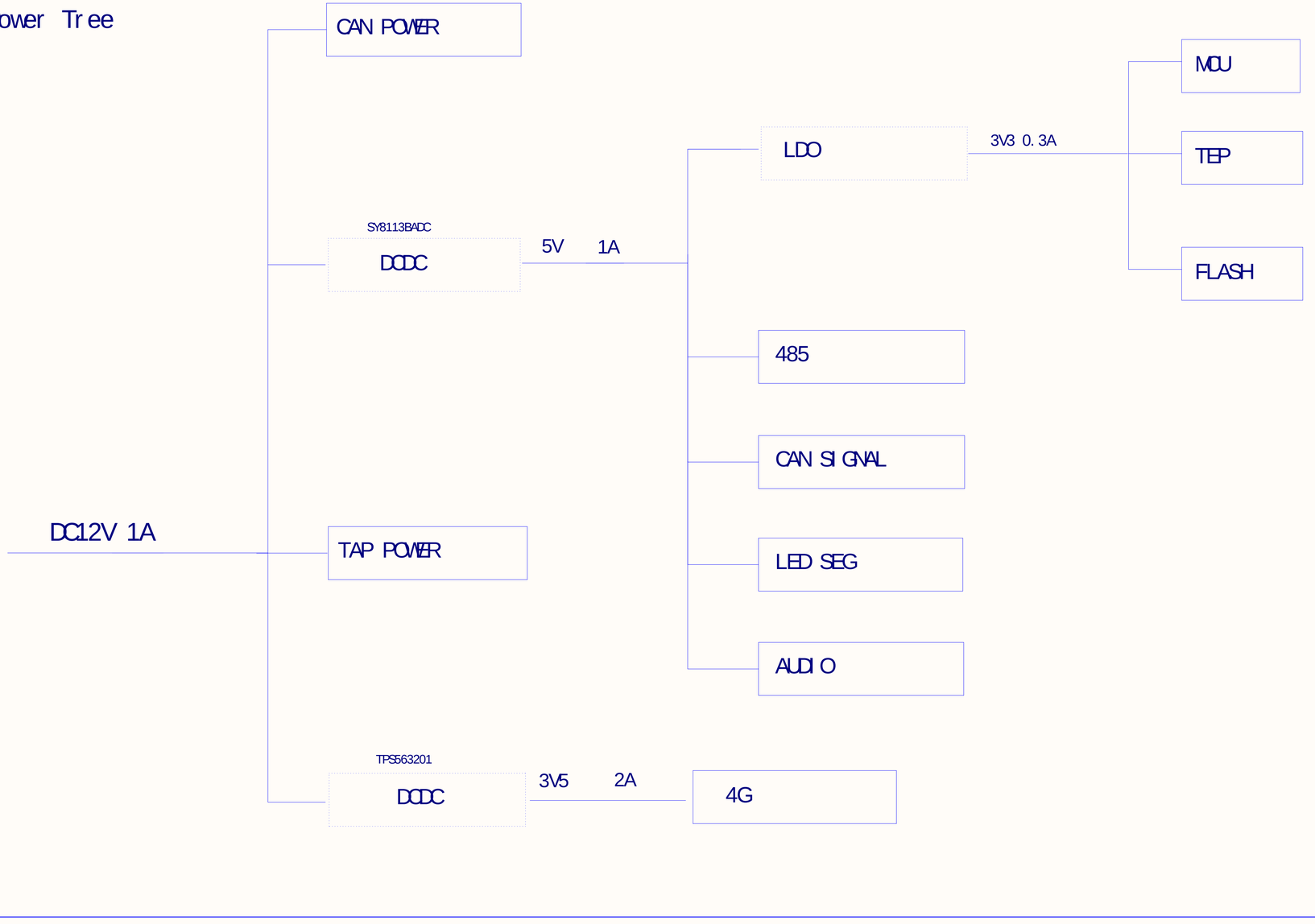

Title		
Size: A4	Number	Revision
Date: 2019/8/13		Sheet of
File: C:\Users\..\02_POWER_TREE.SchDoc		Drawn By:

POWER_IN

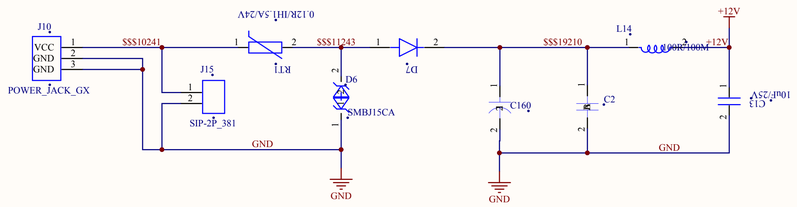

VOUT=0.6*(R1/R2+1)

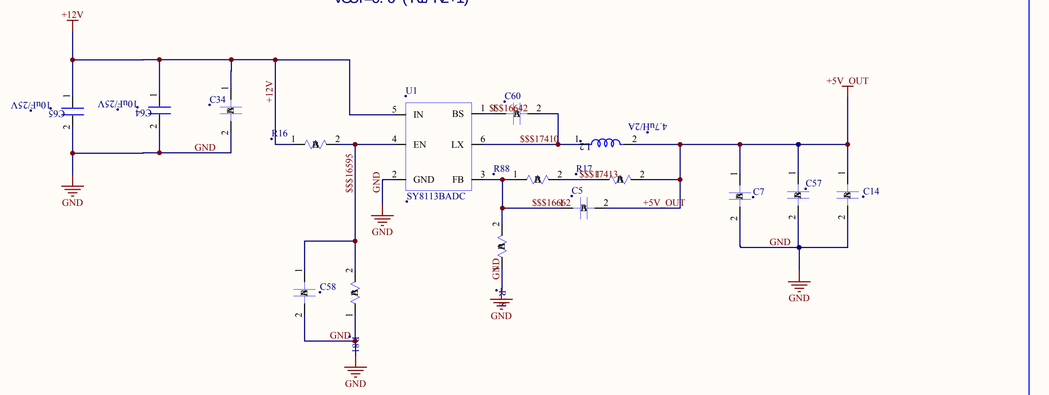

VOUT=0.765*(1+R2/R3)

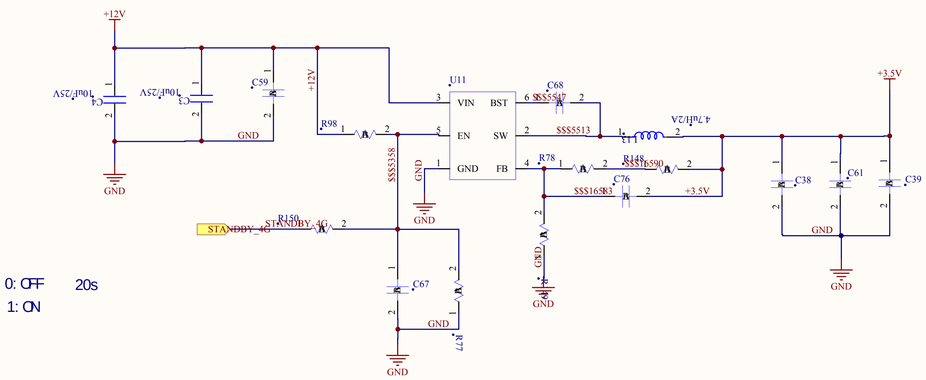

3.3V OUTPUT POWER

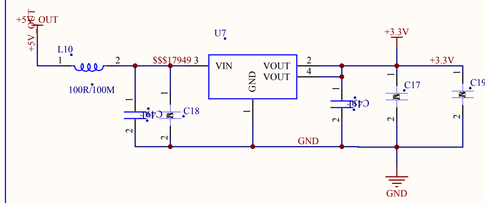

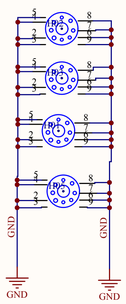

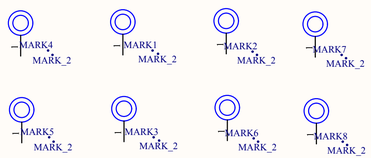

Title			
Size A4	Number		Revision
Date: 2019/8/13		Sheet of	
File: C:\Users\..\03_POWER.SchDoc		Drawn By:	

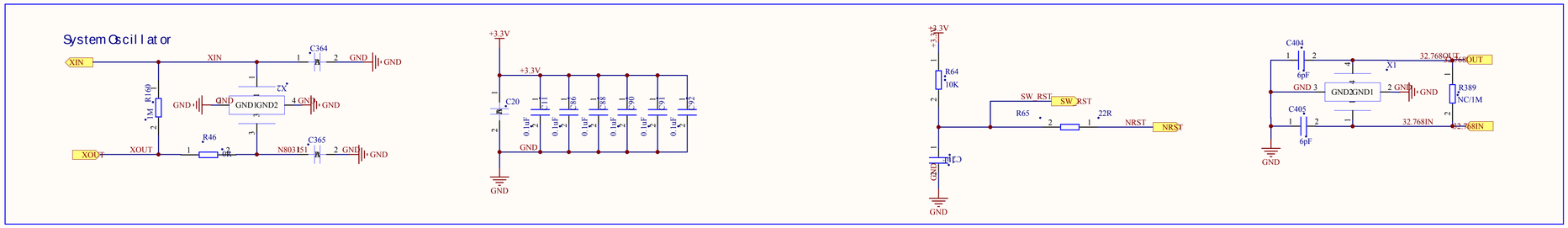

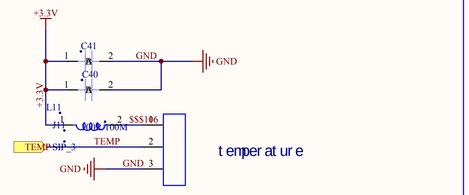

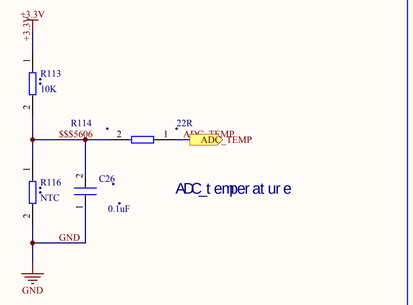

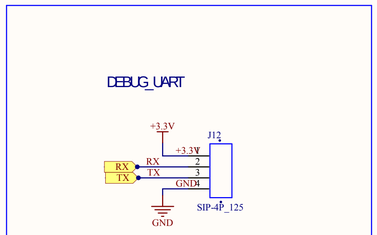

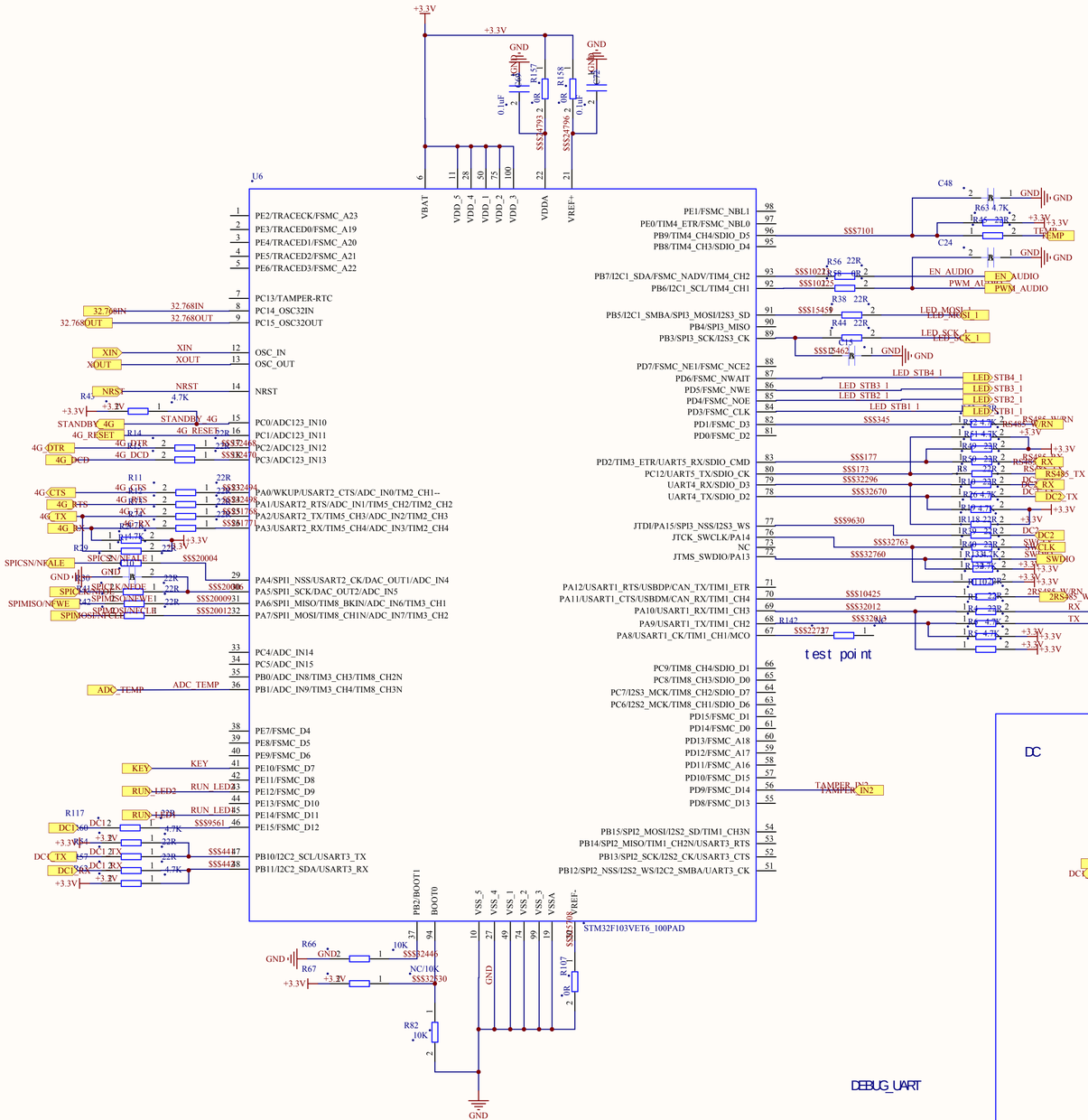
U6
STM32F103VET6_100PAD
PE2/TRACECK/FSMC_A23
PE3/TRACED0/FSMC_A19
PE4/TRACED1/FSMC_A20
PE5/TRACED2/FSMC_A21
PE6/TRACED3/FSMC_A22
PC13/TAMPER-RTC
PC14_OSC32IN
PC15_OSC32OUT
OSC_IN
OSC_OUT
NRST
PC0/ADC123_IN10
PC1/ADC123_IN11
PC2/ADC123_IN12
PC3/ADC123_IN13
PA0/WKUP/USART2_CTS/ADC_IN0/TM2_CH1--
PA1/USART2_RTS/ADC_IN1/TIM5_CH2/TIM2_CH2
PA2/USART2_TX/TIM5_CH3/ADC_IN2/TIM2_CH3
PA3/USART2_RX/TIM5_CH4/ADC_IN3/TIM2_CH4
PA4/SPI1_NSS/USART2_CK/DAC_OUT1/ADC_IN4
PA5/SPI1_SCK/DAC_OUT2/ADC_IN5
PA6/SPI1_MISO/TIM8_BKIN/ADC_IN6/TIM3_CH1
PA7/SPI1_MOSI/TIM8_CH1N/ADC_IN7/TIM3_CH2
PC4/ADC_IN14
PC5/ADC_IN15
PB0/ADC_IN8/TIM3_CH3/TIM8_CH2N
PB1/ADC_IN9/TIM3_CH4/TIM8_CH3N
PE7/FSMC_D4
PE8/FSMC_D5
PE9/FSMC_D6
PE10/FSMC_D7
PE11/FSMC_D8
PE12/FSMC_D9
PE13/FSMC_D10
PE14/FSMC_D11
PE15/FSMC_D12
PB10/I2C2_SCL/USART3_TX
PB11/I2C2_SDA/USART3_RX
PE1/FSMC_NBL1
PE0/TIM4_ETR/FSMC_NBL0
PB9/TIM4_CH4/SDIO_D5
PB8/TIM4_CH3/SDIO_D4
PB7/I2C1_SDA/FSMC_NADV/TIM4_CH2
PB6/I2C1_SCL/TIM4_CH1
PB5/I2C1_SMBA/SPI3_MOSI/I2S3_SD
PB4/SPI3_MISO
PB3/SPI3_SCK/I2S3_CK
PD7/FSMC_NE1/FSMC_NCE2
PD6/FSMC_NWAIT
PD5/FSMC_NWE
PD4/FSMC_NOE
PD3/FSMC_CLK
PD1/FSMC_D3
PD0/FSMC_D2
PD2/TIM3_ETR/UART5_RX/SDIO_CMD
PC12/UART5_TX/SDIO_CK
UART4_RX/SDIO_D3
UART4_TX/SDIO_D2
JTDI/PA15/SPI3_NSS/I2S3_WS
JTCK_SWCLK/PA14
NC
JTMS_SWDIO/PA13
PA12/USART1_RTS/USBDP/CAN_TX/TIM1_ETR
PA11/USART1_CTS/USBDM/CAN_RX/TIM1_CH4
PA10/USART1_RX/TIM1_CH3
PA9/USART1_TX/TIM1_CH2
PA8/USART1_CK/TIM1_CH1/MCO
PC9/TIM8_CH4/SDIO_D1
PC8/TIM8_CH3/SDIO_D0
PC7/I2S3_MCK/TIM8_CH2/SDIO_D7
PC6/I2S2_MCK/TIM8_CH1/SDIO_D6
PD15/FSMC_D1
PD14/FSMC_D0
PD13/FSMC_A18
PD12/FSMC_A17
PD11/FSMC_A16
PD10/FSMC_D15
PD9/FSMC_D14
PD8/FSMC_D13
PB15/SPI2_MOSI/I2S2_SD/TIM1_CH3N
PB14/SPI2_MISO/TIM1_CH2N/USART3_RTS
PB13/SPI2_SCK/I2S2_CK/USART3_CTS
PB12/SPI2_NSS/I2S2_WS/I2C2_SMBA/UART3_CK
VBAT
VDD_5
VDD_4
VDD_1
VDD_2
VDD_3
VDDA
VREF+
VSS_5
VSS_4
VSS_1
VSS_2
VSS_3
VSSA
VREF-
BOOT1
BOOT0
PB2/BOOT1
R66
10K
R67
NC/10K
R82
10K
R107
0R
R117
4.7K
R14
4.7K
R11
22R
R29
22R
R30
22R
R31
22R
R32
22R
R33
4.7K
R43
4.7K
R44
22R
R38
22R
R56
22R
R63
4.7K
R45
22R
R142
R157
0R
R158
0R
C48
C24
C13
C15
C9
0.1uF
KEY
RUN_LED2
RUN_LED1
EN_AUDIO
PWM_AUDIO
LED_MOSI_1
LED_SCK_1
LED_STB4_1
LED_STB3_1
LED_STB2_1
LED_STB1_1
RS485_W/RN
RS485_RX
RS485_TX
DC1_TX
DC1_RX
DC2_TX
DC2_RX
SWCLK
SWDIO
TEMP
ADC_TEMP
TAMPER_IN2
test point
4G_RESET
4G_DTR
4G_DCD
4G_CTS
4G_RTS
4G_TX
4G_RX
SPICSN/NEALE
SPICLK/NEDE
SPIMISO/NEWE
SPIMOSI/NLB
STANDBY_4G
32.768IN
32.768OUT
XIN
XOUT
NRST
SSS7101
SSS10225
SSS15459
SSS5467
SSS345
SSS177
SSS3296
SSS32670
SSS9630
SSS32763
SSS32760
SSS10425
SSS32012
SSS32013
SSS22737
SSS32446
SSS32530
SSS20004
SSS20006
SSS2000931
SSS2001232
SSS10227
SSS10226
SSS9561
SSS4487
SSS4488
SSS32488
SSS32470
SSS32494
SSS32495
SSS32517
SSS32518
SSS5606
SSS5793
SSS5796
SSS5795
SSS5794
SSS14808
SSS13353
SSS13355
SSS5469
SSS5468
SSS5471
SSS5470
SSS5472
SSS5473
SSS5474
SSS5475
SSS5476
SSS5477
SSS5478
SSS5479
SSS5480
SSS5481
SSS5482
SSS5483
SSS5484
SSS5485
SSS5486
SSS5487
SSS5488
SSS5489
SSS5490
SSS5491
SSS5492
SSS5493
SSS5494
SSS5495
SSS5496
SSS5497
SSS5498
SSS5499
SSS5500
SSS5501
SSS5502
SSS5503
SSS5504
SSS5505
SSS5506
SSS5507
SSS5508
SSS5509
SSS5510
SSS5511

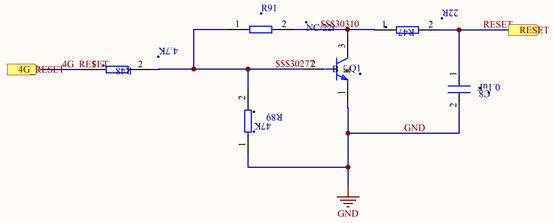

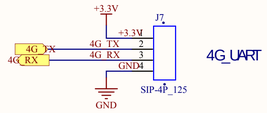

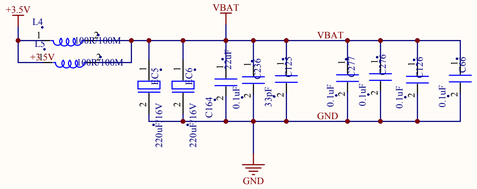

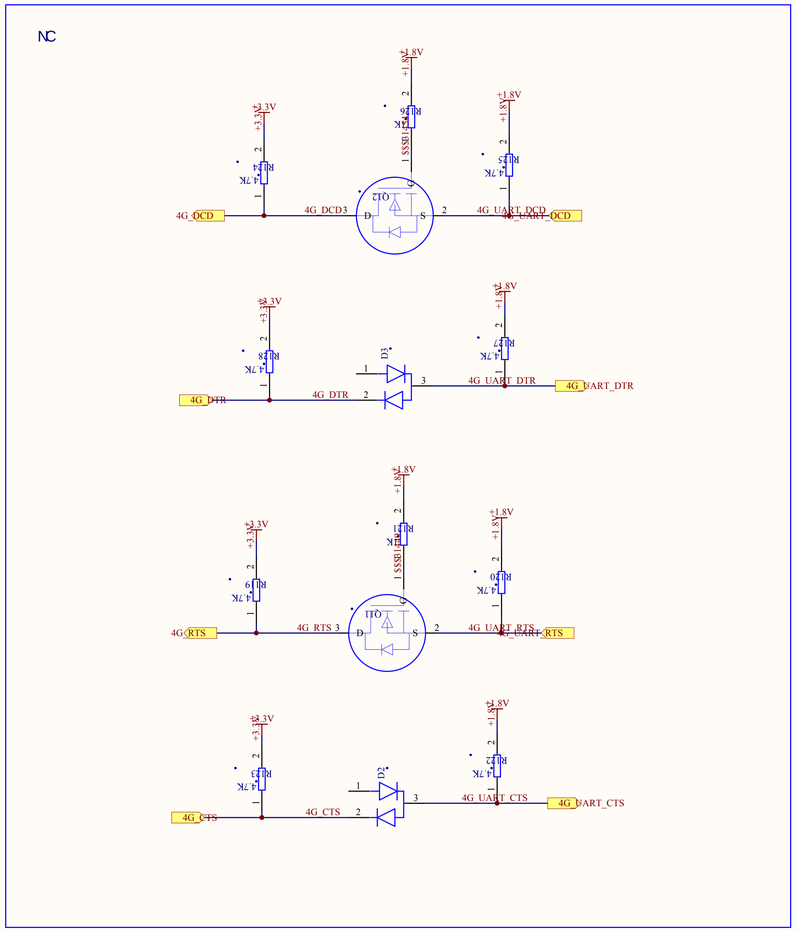

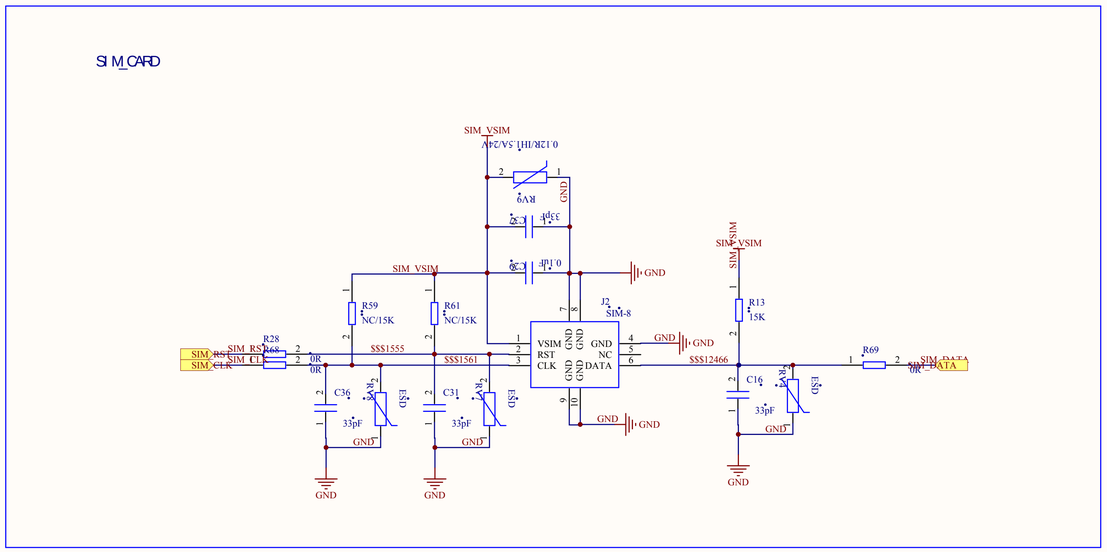

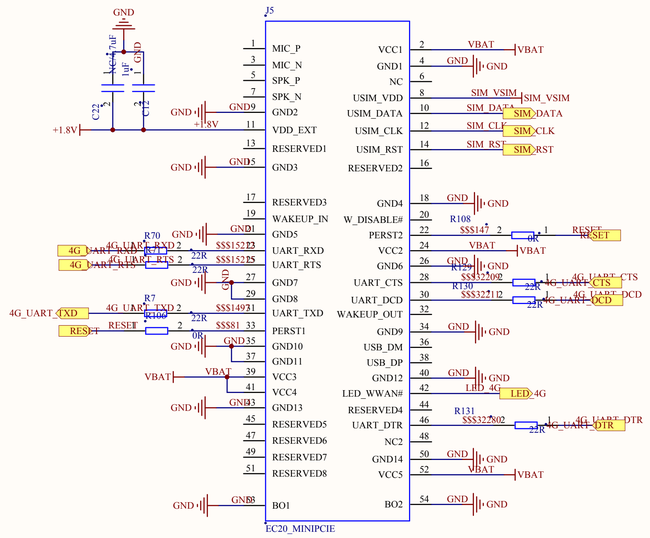

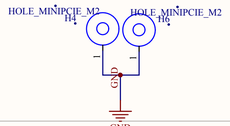

Title			
Size	Number		Revision
A4			
Date:	2019/8/13	Sheet of	
File:	C:\Users\..\05_4G.SchDoc	Drawn By:	

AUDIO

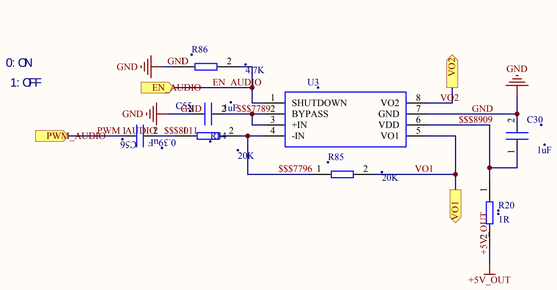

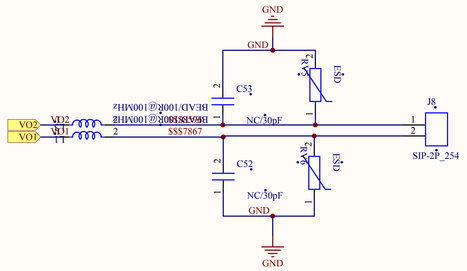

Title			
Size	Number		Revision
A4			
Date:	2019/8/13	Sheet of	
File:	C:\Users\..\06_AUDIO.SchDoc	Drawn By:	

485-1

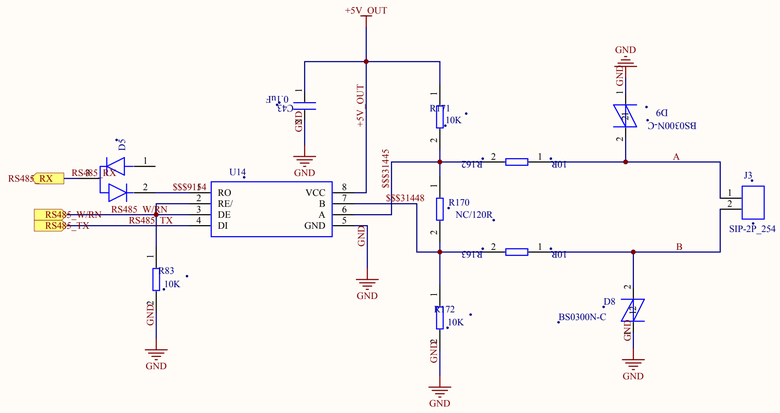

Title			
Size	Number		Revision
A4			
Date:	2019/8/13	Sheet of	
File:	C:\Users\..\07_485-1.SchDoc	Drawn By:	

SPI_FLASH

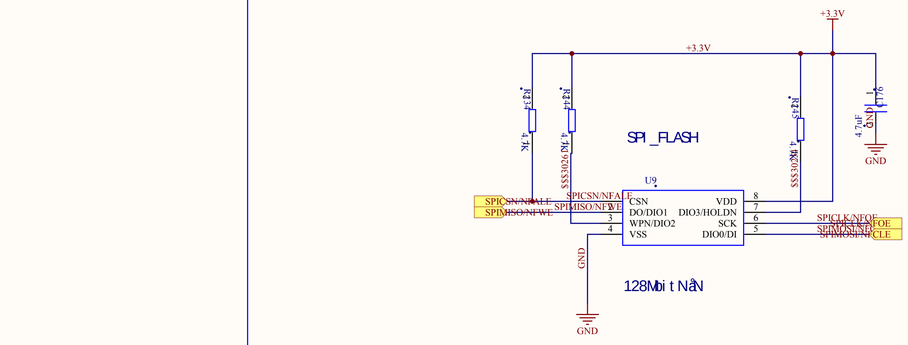

Title			
Size A4	Number		Revision
Date:	2019/8/13	Sheet of	
File:	C:\Users\..\08_SPIFLASH.SchDoc	Drawn By:	

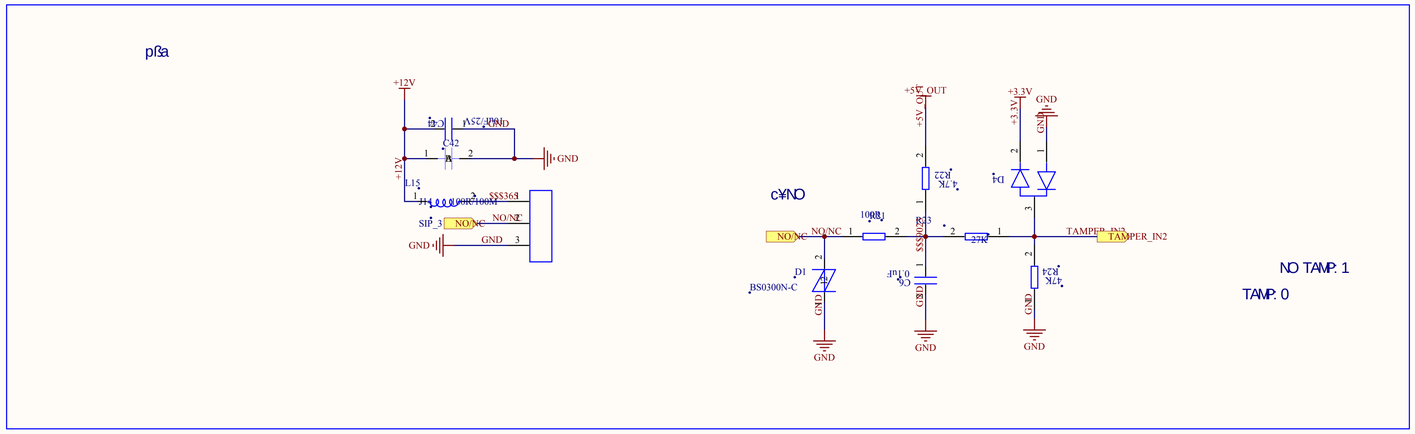

Title		
Size A4	Number	Revision
Date: 2019/8/13		Sheet of
File: C:\Users\..\09_TAMPER.SchDoc		Drawn By:

LED_SEG

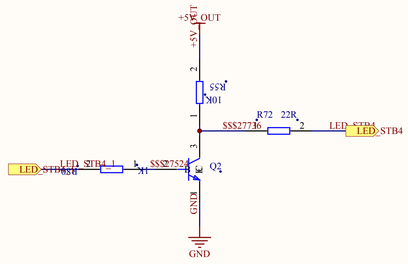

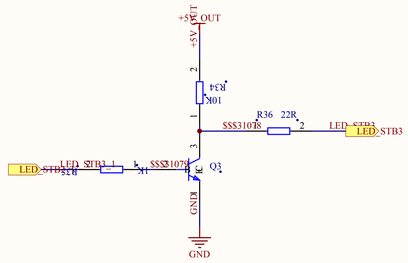

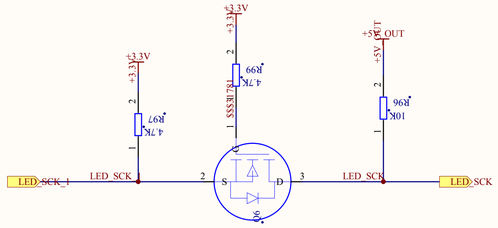

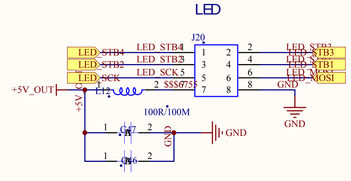

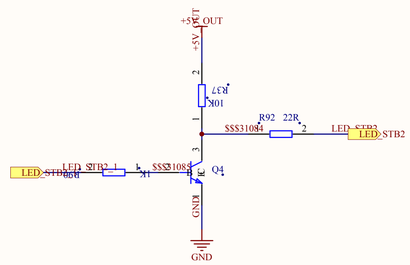

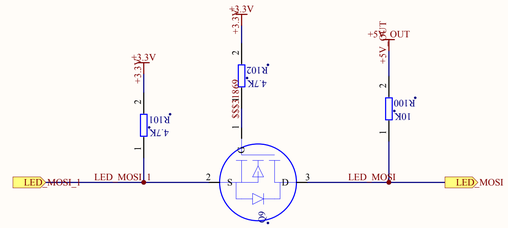

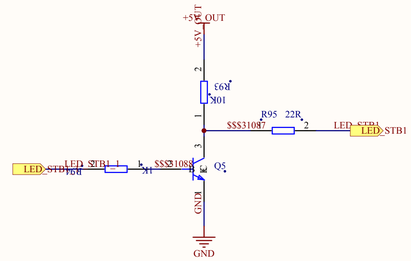

Title			
Size	Number		Revision
A4			
Date:	2019/8/13	Sheet of	
File:	C:\Users\..\10_LED_SEG.SchDoc	Drawn By:	

485- 2

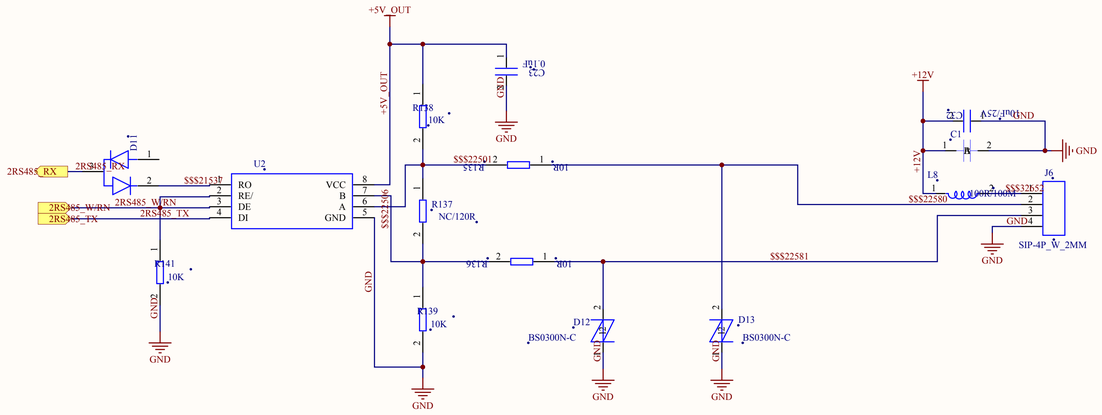

Title			
Size	Number		Revision
A4			
Date:	2019/8/13	Sheet of	
File:	C:\Users\..\11_485-2.SchDoc	Drawn By:	

2019. 06. 20	V1. 00	™ґH

Title		
Size A4	Number	Revision
Date:	2019/8/13	Sheet of
File:	C:\Users\..\12_HISTORY.SchDoc	Drawn By: