Rev	Date	Notes
A	8/29/2011	Created from 750-2170-001 rev. D schematic (input power and antenna matching component changes). Added resistor on VBAT to allow overall current measurement.
B	10/6/2011	Changed antenna matching components per final RF testing.

Table of Contents

Pg# - Schematic Page Name

---

1 - Title Page
2 - Input Power
3 - Phoenix Power Component
4 - Phoenix Audio Component
5 - OMAP4460 Symbol A
6 - OMAP4460 Symbol B
7 - OMAP4460 Symbol C
8 - OMAP4460 Debug Interface
9 - SDMMC Card Interface + USB Phy (Hub)
10 - DVI & HDMI Connector
11 - Debug Ethernet
12 - Audio Jack/RS-232 Connection
13 - Expansion Connectors
14 - WLAN Subsystem

pandaboard.org

OMAP4460 Panda Board, 8-Layer

Title Page

Document Number	750-2170-002-SCH	Rev	B
Date: Thursday, October 06, 2011	Sheet 1	of	14

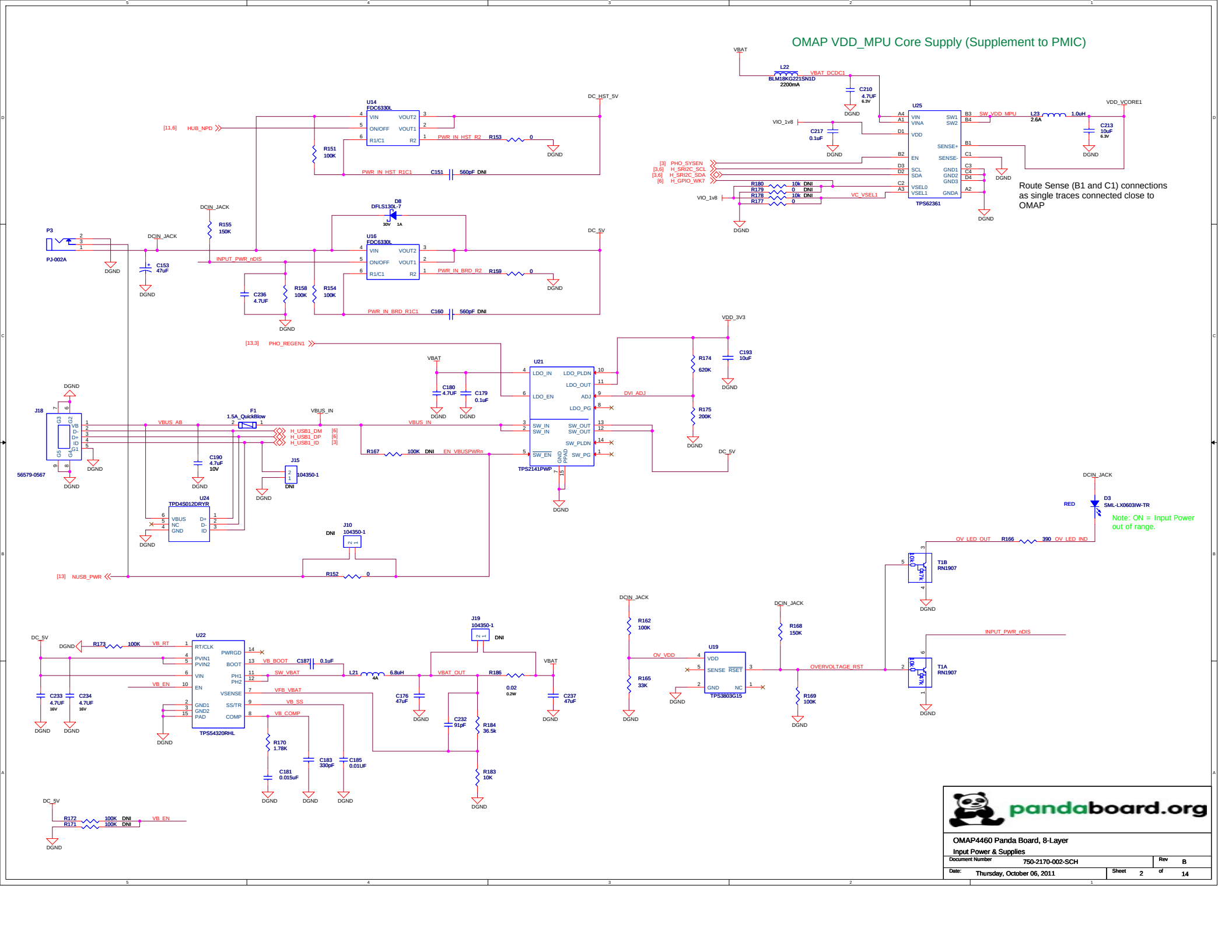

pandaboard.org

OMAP4460 Panda Board, 8-Layer

Input Power & Supplies

Document Number	750-2170-002-SCH	Rev	B
Date: Thursday, October 06, 2011	Sheet 2	of	14

OMAP4 Power Management

Component ROOM = PMIC

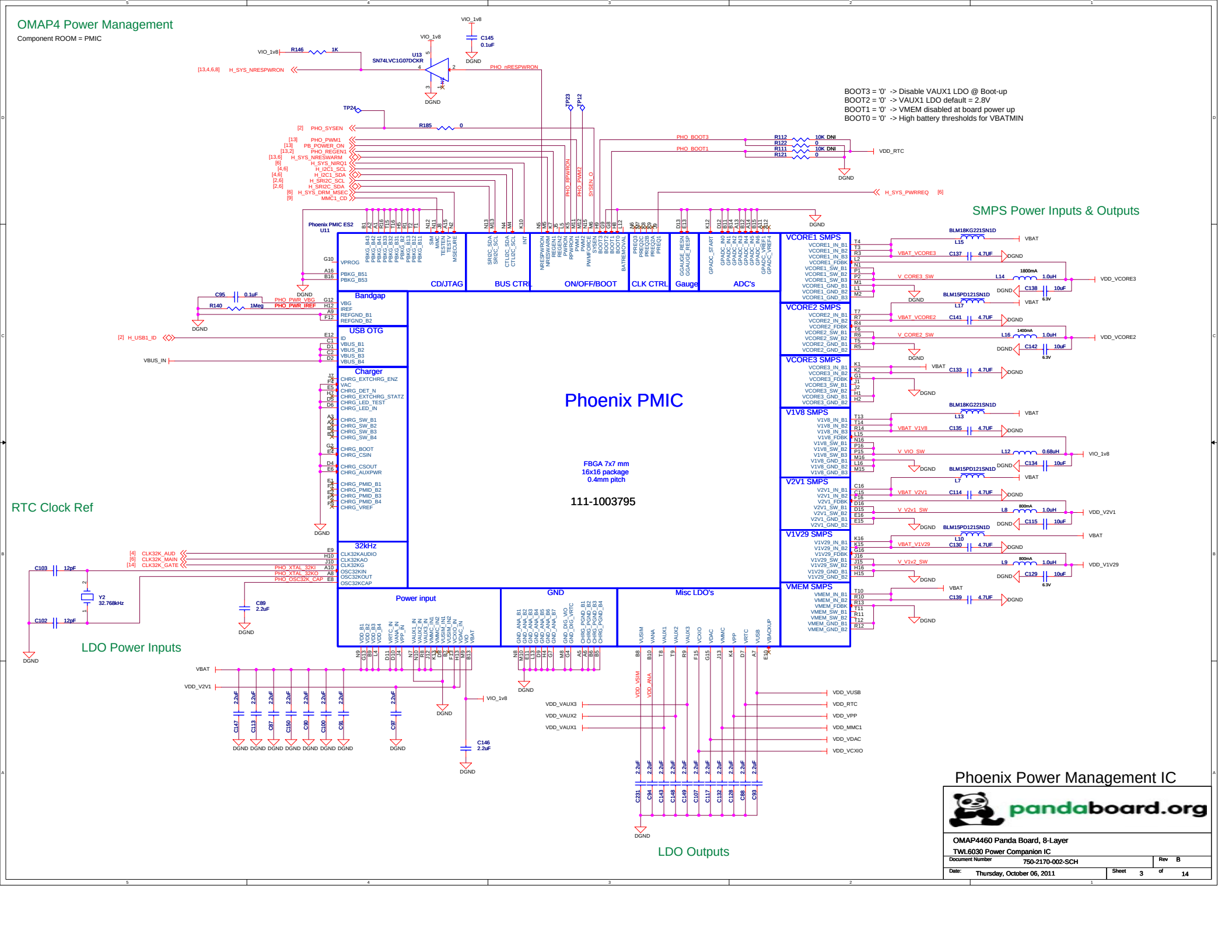

Phoenix Power Management IC

pandaboard.org

OMAP4460 Panda Board, 8-Layer

TWL6030 Power Companion IC

Document Number	750-2170-002-SCH	Rev	B
Date: Thursday, October 06, 2011	Sheet 3	of	14

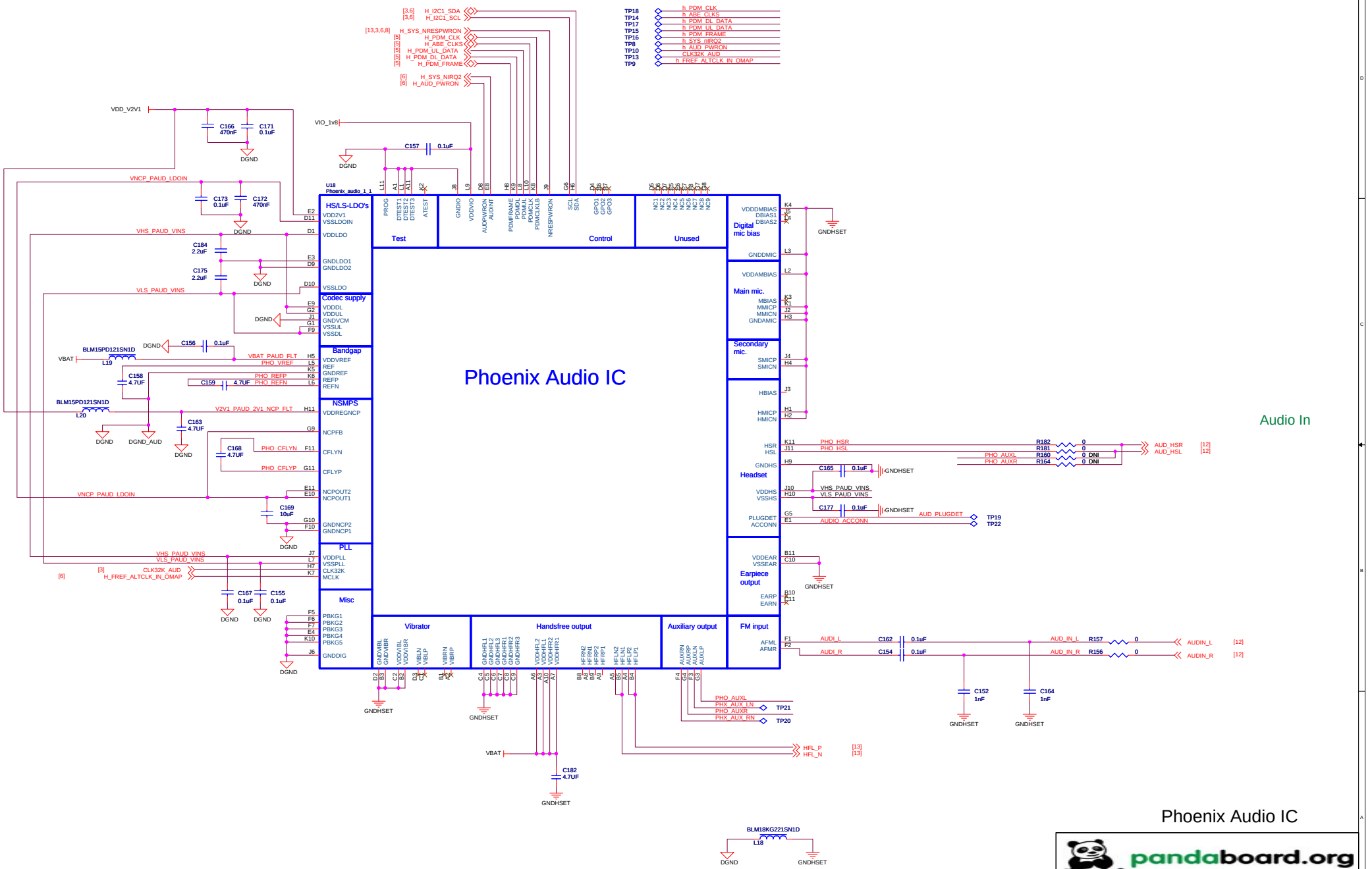
Phoenix Audio IC
U18
Phoenix_audio_1_1
HS/LS-LDO's
Test
Control
Unused
Digital mic bias
Main mic.
Secondary mic.
Codec supply
Bandgap
NSMPS
PLL
Misc
Vibrator
Handsfree output
Auxiliary output
FM input
Headset
Earpiece output
Audio In
TP18 h_PDM_CLK
TP14 h_ABE_CLKS
TP17 h_PDM_DL_DATA
TP15 h_PDM_UL_DATA
TP16 h_PDM_FRAME
TP8 h_SYS_nIRQ2
TP10 h_AUD_PWRON
TP13 CLK32K_AUD
TP9 h_FREF_ALTCLK_IN_OMAP
[3,6] H_I2C1_SDA
[3,6] H_I2C1_SCL
[13,3,6,8] H_SYS_NRESPWRON
[5] H_PDM_CLK
[5] H_ABE_CLKS
[5] H_PDM_UL_DATA
[5] H_PDM_DL_DATA
[5] H_PDM_FRAME
[6] H_SYS_NIRQ2
[6] H_AUD_PWRON
VDD_V2V1
VIO_1v8
VBAT
VNCP_PAUD_LDOIN
VHS_PAUD_VINS
VLS_PAUD_VINS
V2V1_PAUD_2V1_NCP_FLT
VBAT_PAUD_FLT
PHO_VREF
PHO_REFP
PHO_REFN
PHO_CFLYN
PHO_CFLYP
CLK32K_AUD
H_FREF_ALTCLK_IN_OMAP
AUDIO_ACCONN
AUD_PLUGDET
AUDI_L
AUDI_R
PHO_AUXL
PHX_AUX_LN
PHO_AUXR
PHX_AUX_RN
HFL_P
HFL_N
AUD_HSR
AUD_HSL
AUDIN_L
AUDIN_R
C166 470nF
C171 0.1uF
C157 0.1uF
C173 0.1uF
C172 470nF
C184 2.2uF
C175 2.2uF
C156 0.1uF
C158 4.7UF
C159 4.7UF
C163 4.7UF
C168 4.7UF
C169 10uF
C167 0.1uF
C155 0.1uF
C165 0.1uF
C177 0.1uF
C162 0.1uF
C154 0.1uF
C152 1nF
C164 1nF
C182 4.7UF
BLM15PD121SN1D L19
BLM15PD121SN1D L20
BLM18KG221SN1D L18
R182 0
R181 0
R160 0 DNI
R164 0 DNI
R157 0
R156 0
DGND
DGND_AUD
GNDSET
GNDHSET
Phoenix Audio IC
OMAP4460 Panda Board, 8-Layer
TWL6040 Audio Companion IC
Document Number 750-2170-002-SCH
Rev B
Date: Thursday, October 06, 2011
Sheet 4 of 14

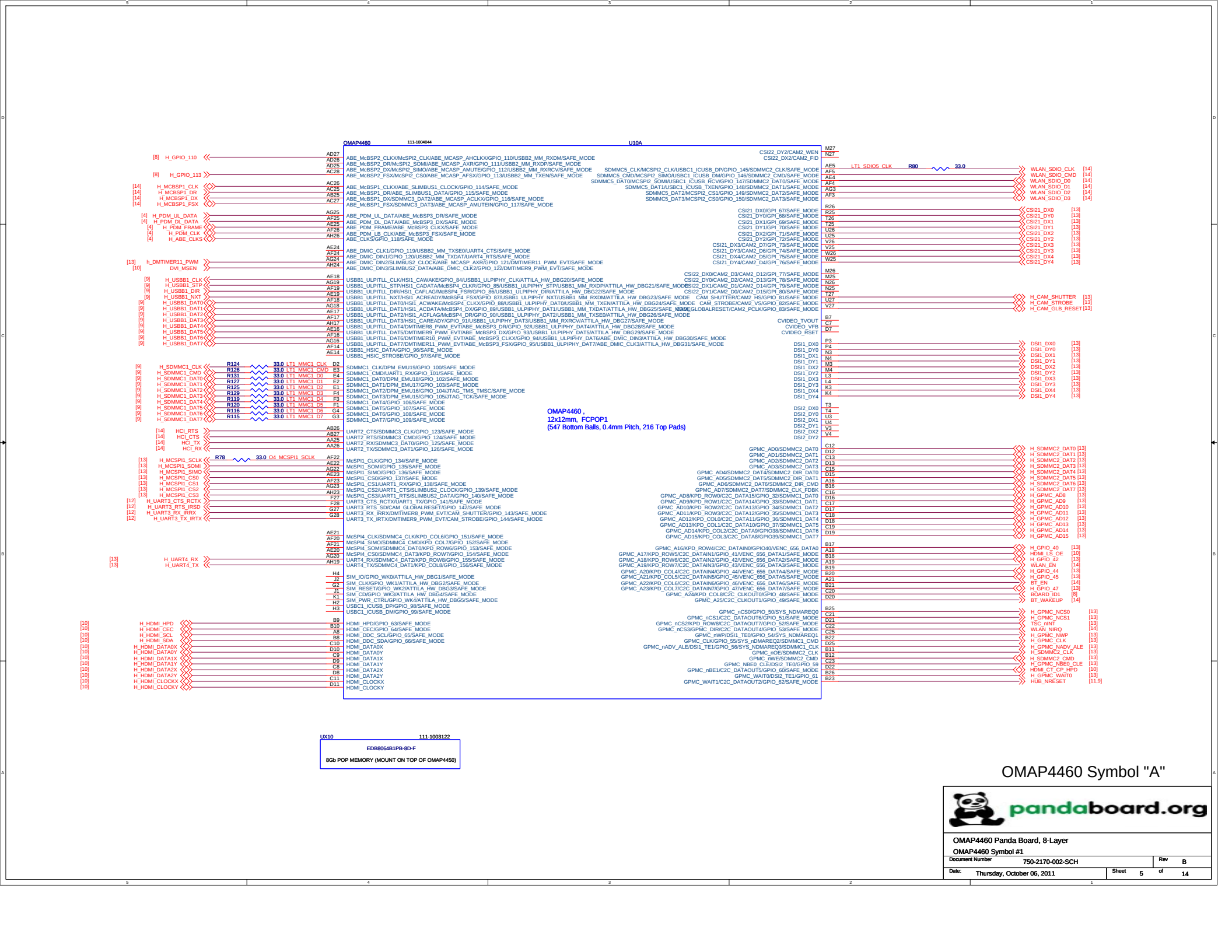
OMAP4460
111-1004044
U10A
OMAP4460 ,
12x12mm, FCPOP1
(547 Bottom Balls, 0.4mm Pitch, 216 Top Pads)
UX10
111-1003122
EDB8064B1PB-8D-F
8Gb POP MEMORY (MOUNT ON TOP OF OMAP4450)
OMAP4460 Symbol "A"
pandaboard.org
OMAP4460 Panda Board, 8-Layer
OMAP4460 Symbol #1
Document Number 750-2170-002-SCH
Rev B
Date: Thursday, October 06, 2011
Sheet 5 of 14

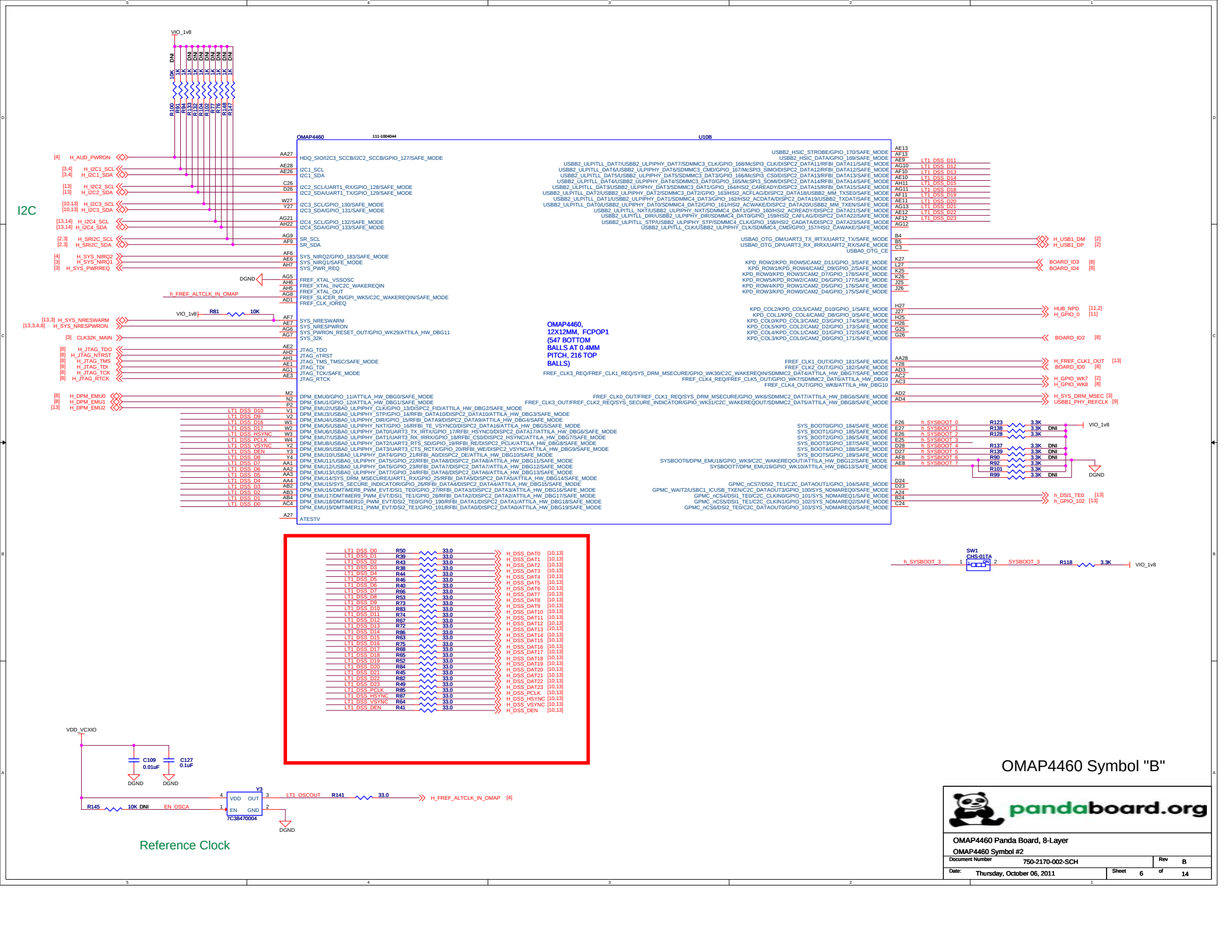
OMAP4460
111-1004044
U10B
OMAP4460,
12X12MM, FCPOP1
(547 BOTTOM
BALLS AT 0.4MM
PITCH, 216 TOP
BALLS)
I2C
VIO_1v8
DNI
10K
1K
R100
R91
R94
R133
R134
R104
R102
R75
R76
R148
R147
R81
10K
DGND
h_FREF_ALTCLK_IN_OMAP
H_AUD_PWRON
H_I2C1_SCL
H_I2C1_SDA
H_I2C2_SCL
H_I2C2_SDA
H_I2C3_SCL
H_I2C3_SDA
H_I2C4_SCL
H_I2C4_SDA
H_SRI2C_SCL
H_SRI2C_SDA
H_SYS_NIRQ2
H_SYS_NIRQ1
H_SYS_PWRREQ
H_SYS_NRESWARM
H_SYS_NRESPWRON
CLK32K_MAIN
H_JTAG_TDO
H_JTAG_NTRST
H_JTAG_TMS
H_JTAG_TDI
H_JTAG_TCK
H_JTAG_RTCK
H_DPM_EMU0
H_DPM_EMU1
H_DPM_EMU2
LT1_DSS_D0
LT1_DSS_D1
LT1_DSS_D2
LT1_DSS_D3
LT1_DSS_D4
LT1_DSS_D5
LT1_DSS_D6
LT1_DSS_D7
LT1_DSS_D8
LT1_DSS_D9
LT1_DSS_D10
LT1_DSS_D11
LT1_DSS_D12
LT1_DSS_D13
LT1_DSS_D14
LT1_DSS_D15
LT1_DSS_D16
LT1_DSS_D17
LT1_DSS_D18
LT1_DSS_D19
LT1_DSS_D20
LT1_DSS_D21
LT1_DSS_D22
LT1_DSS_D23
LT1_DSS_PCLK
LT1_DSS_HSYNC
LT1_DSS_VSYNC
LT1_DSS_DEN
H_DSS_DAT0
H_DSS_DAT1
H_DSS_DAT2
H_DSS_DAT3
H_DSS_DAT4
H_DSS_DAT5
H_DSS_DAT6
H_DSS_DAT7
H_DSS_DAT8
H_DSS_DAT9
H_DSS_DAT10
H_DSS_DAT11
H_DSS_DAT12
H_DSS_DAT13
H_DSS_DAT14
H_DSS_DAT15
H_DSS_DAT16
H_DSS_DAT17
H_DSS_DAT18
H_DSS_DAT19
H_DSS_DAT20
H_DSS_DAT21
H_DSS_DAT22
H_DSS_DAT23
H_DSS_PCLK
H_DSS_HSYNC
H_DSS_VSYNC
H_DSS_DEN
VDD_VCXIO
C109
0.01uF
C127
0.1uF
Y3
7C38470004
R145
10K DNI
EN_OSCA
LT1_OSCOUT
R141
33.0
H_FREF_ALTCLK_IN_OMAP
Reference Clock
SW1
CHS-01TA
h_SYSBOOT_3
SYSBOOT_3
R118
3.3K
h_SYSBOOT_0
h_SYSBOOT_1
h_SYSBOOT_2
h_SYSBOOT_3
h_SYSBOOT_4
h_SYSBOOT_5
h_SYSBOOT_6
h_SYSBOOT_7
R123
R138
R128
R137
R139
R90
R92
R101
R99
3.3K
DNI
H_USB1_DM
H_USB1_DP
BOARD_ID3
BOARD_ID4
BOARD_ID2
HUB_NPD
H_GPIO_0
H_FREF_CLK1_OUT
BOARD_ID0
H_GPIO_WK7
H_GPIO_WK8
H_SYS_DRM_MSEC
USBB1_PHY_REFCLK
h_DSI1_TE0
h_GPIO_102
OMAP4460 Symbol "B"
pandaboard.org
OMAP4460 Panda Board, 8-Layer
OMAP4460 Symbol #2
Document Number
750-2170-002-SCH
Rev
B
Date:
Thursday, October 06, 2011
Sheet
6
of
14

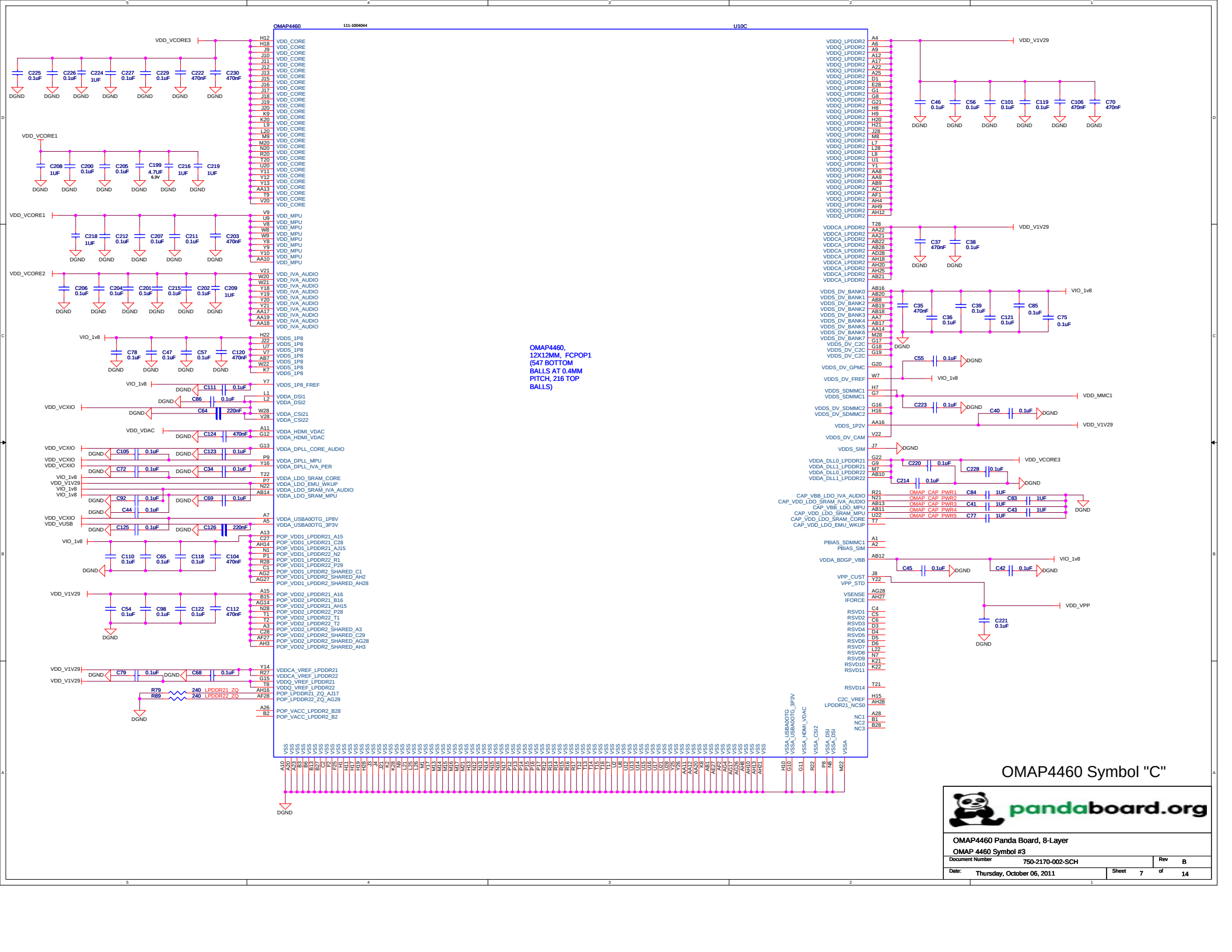
OMAP4460
111-1004044
U10C
OMAP4460,
12X12MM, FCPOP1
(547 BOTTOM
BALLS AT 0.4MM
PITCH, 216 TOP
BALLS)
VDD_VCORE3
VDD_VCORE1
VDD_VCORE2
VIO_1v8
VDD_V1V29
VDD_MMC1
VDD_VCORE3
VDD_VPP
DGND
OMAP4460 Symbol "C"
pandaboard.org
OMAP4460 Panda Board, 8-Layer
OMAP 4460 Symbol #3
Document Number 750-2170-002-SCH
Rev B
Date: Thursday, October 06, 2011
Sheet 7 of 14

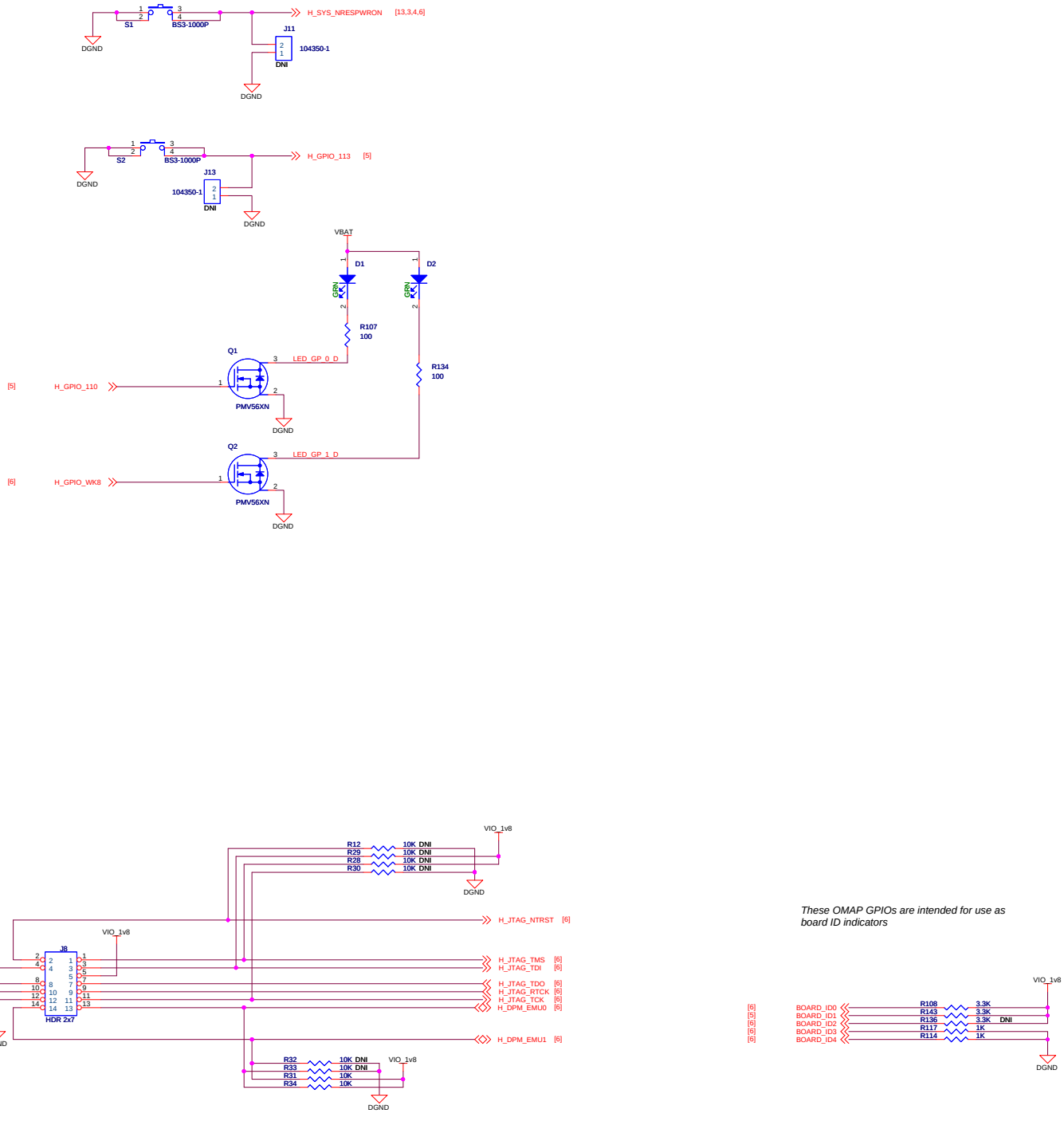

OMAP Debug IF - JTAG Connectors

pandaboard.org

OMAP4460 Panda Board, 8-Layer

JTAG, Debug Connectors

Document Number	750-2170-002-SCH	Rev	B
Date: Thursday, October 06, 2011	Sheet 8	of	14

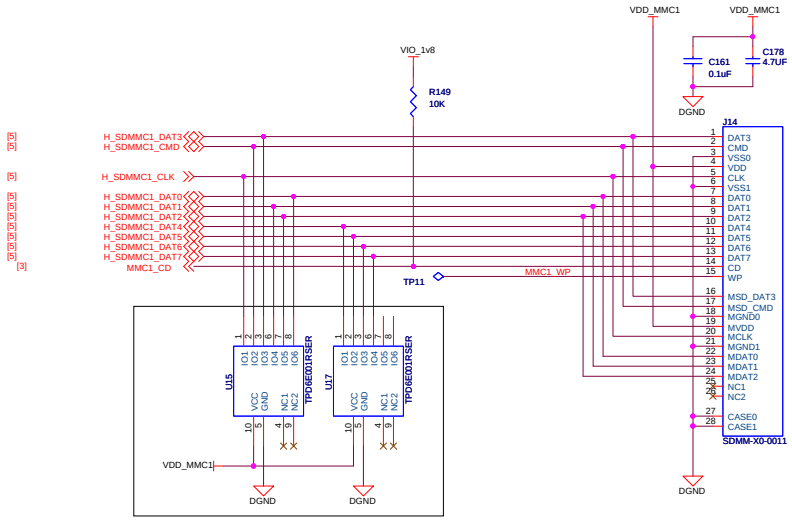

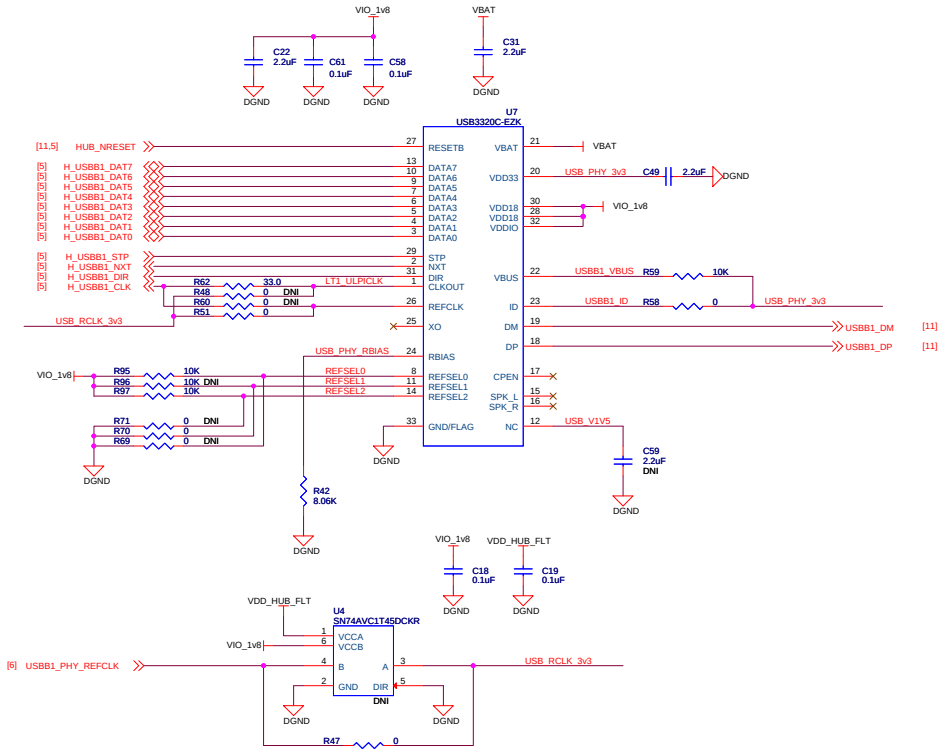

pandaboard.org

OMAP4460 Panda Board, 8-Layer

SDMMC Card Cage + USB Phy

Document Number	750-2170-002-SCH	Rev	B
Date: Thursday, October 06, 2011	Sheet 9	of	14

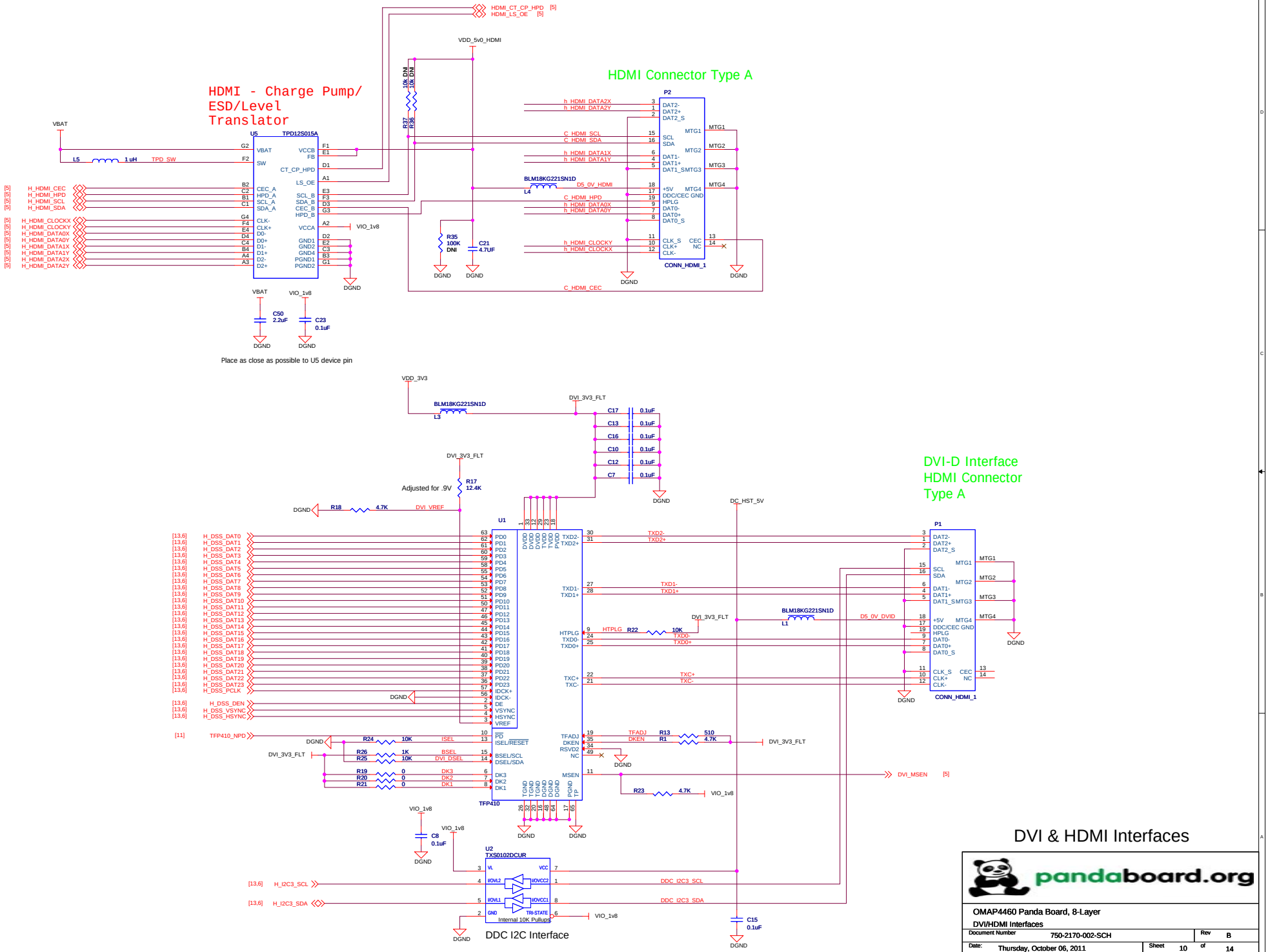

DVI & HDMI Interfaces

pandaboard.org

OMAP4460 Panda Board, 8-Layer

DVI/HDMI Interfaces

Document Number	750-2170-002-SCH	Rev	B
Date: Thursday, October 06, 2011	Sheet 10 of 14		

USB + Ethernet Hub

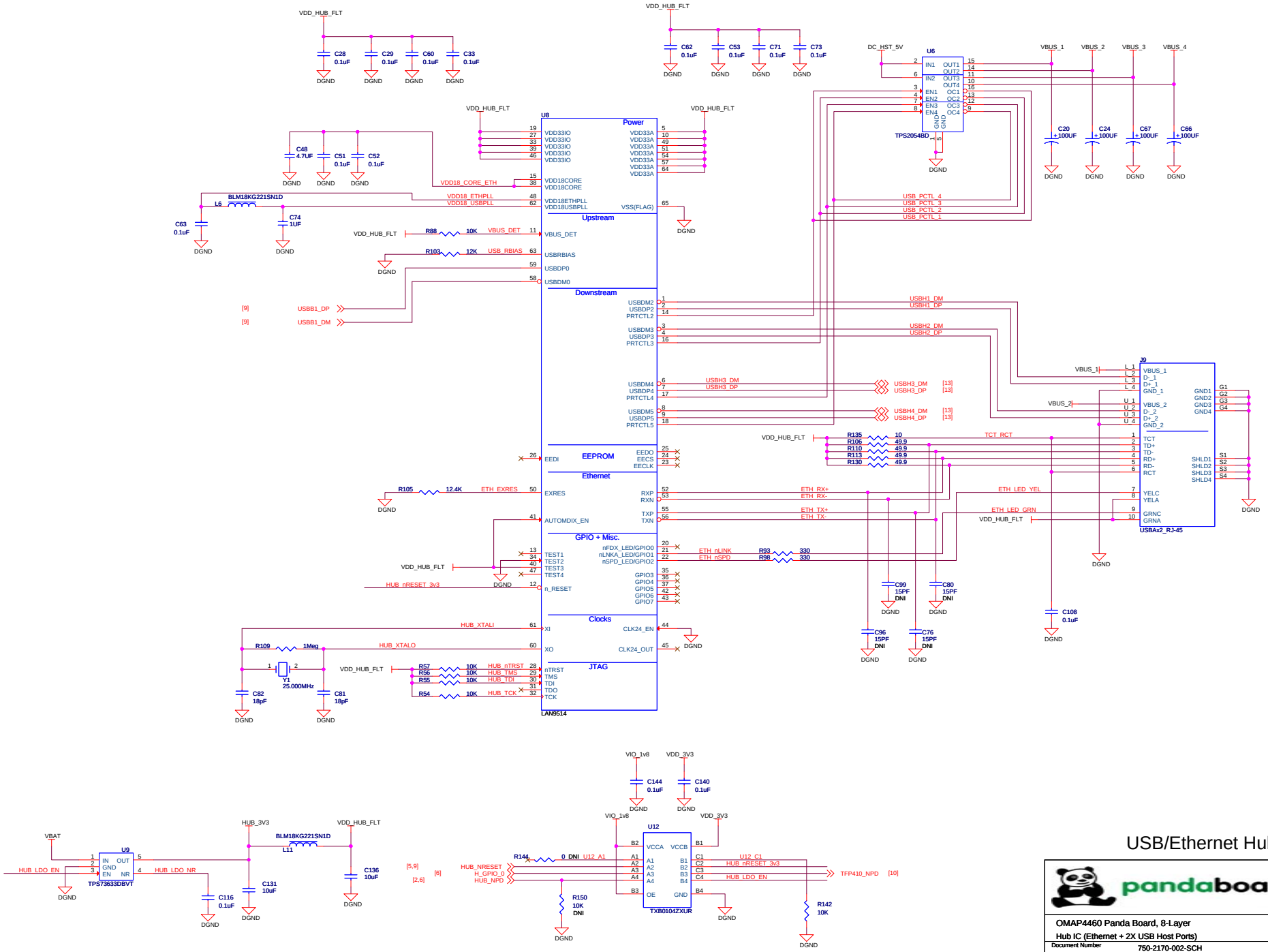

USB/Ethernet Hub

pandaboard.org

OMAP4460 Panda Board, 8-Layer

Hub IC (Ethernet + 2X USB Host Ports)

Document Number	750-2170-002-SCH	Rev	B
Date: Thursday, October 06, 2011		Sheet 11	of 14

PCB Note:
Traces surrounded by GNDHSET shield
& routed diff to connector

[4] AUDIN_L
[4] AUDIN_R

D4 PGB0010603MR
D7 PGB0010603MR
GNDHSET

PCB Note: Place circuit near A/V connector.

[4] AUD_HSR
[4] AUD_HSL
R163 15
R161 15
C174 0.01uF
C170 0.01uF
GNDHSET
GNDHSET
D6 PGB0010603MR
D5 PGB0010603MR
GNDHSET
HS_EAR_R
HS_EAR_L
GNDHSET

J16
2A
5A
1A
2B
5B
1B
Dual_3.5mmConnectorStacked

Microphone Jack
Headset Jack

VDD_3V3
C186 0.1uF
DGND

VIO_1v8
VDD_3V3
C189 0.1uF
C188 0.1uF
DGND
DGND

U20
VCCA VCCB
OE GND
TXS0104EZXUR
DGND

[5] H_UART3_TX_IRTX
[5] H_UART3_RTS_IRSD
[5] H_UART3_RX_IRRX
[5] H_UART3_CTS_RCTX
UART3_TX_3V3
UART3_RTS_3V3
UART3_RX_3V3
UART3_CTS_3V3

U23
SN75C3232EDR
C1+ C1- C2+ C2-
VCC V+ V- GND
DIN1 DIN2
DOUT1 DOUT2
ROUT1 ROUT2
RIN1 RIN2

C196 0.1uF RS232_C1+
RS232_C1-
C194 0.1uF RS232_C2+
RS232_C2-
VDD_3V3
RS232_V+ C195 0.1uF
RS232_V- C197 0.1uF
DGND

RS232_TX
RS232_RTS
RS232_RX
RS232_CTS

RS232_DSR
R176 0 DNI
RS232_DTR

P4
SHL1 SHL2
190-009-263R001
RS232_DTR
RS232_DSR
DGND
DGND

RS-232
CONNECTOR

3.5mm Audio Conn + RS-232 I/F

pandaboard.org

OMAP4460 Panda Board, 8-Layer
Audio Jack & RS-232 Connector

Document Number	750-2170-002-SCH	Rev	B
Date: Thursday, October 06, 2011	Sheet 12 of 14		

LCD Expansion Connectors (Beagle Legacy)

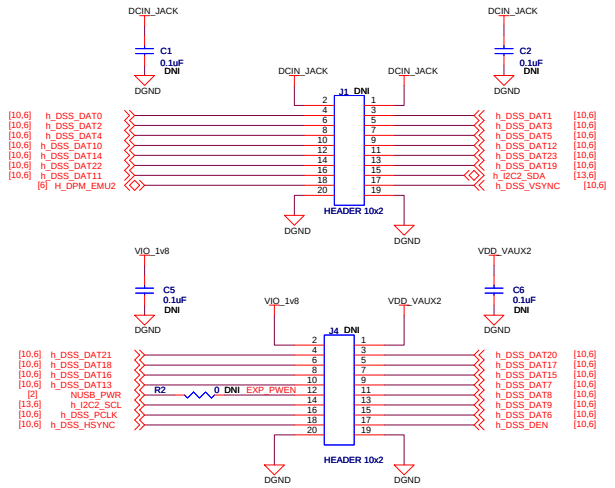

DSI Display Expansion Connector

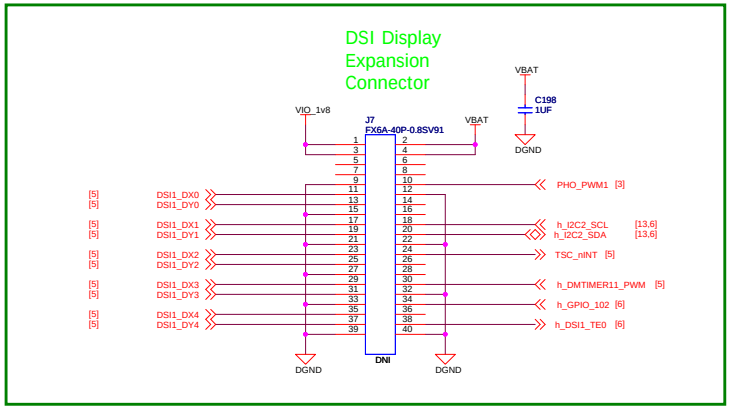

Camera Sensor Expansion Connector

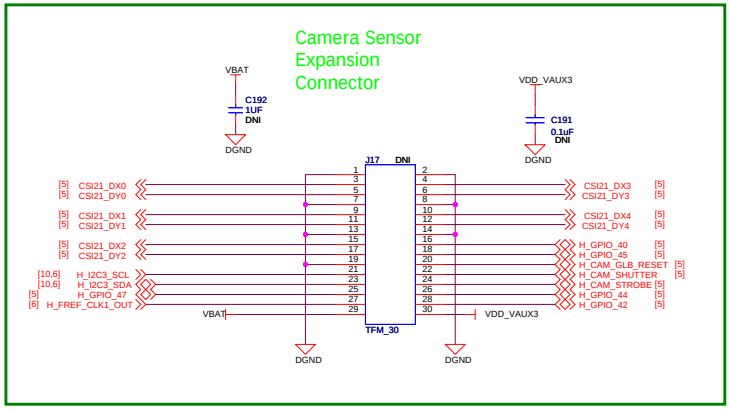

Expansion Connectors

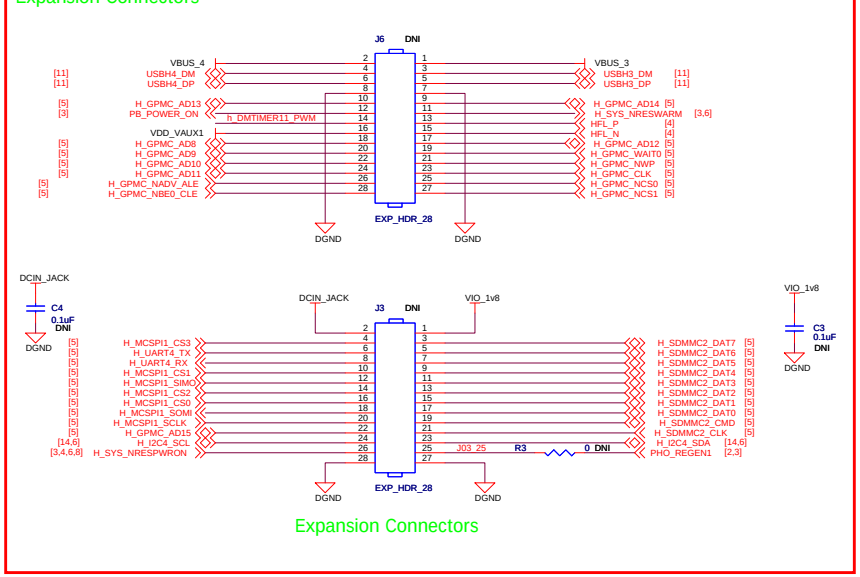

Expansion Connectors

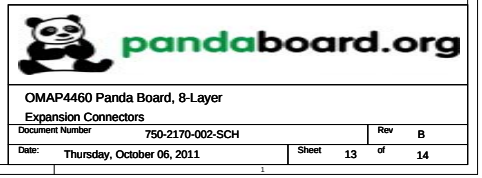

OMAP4460 Panda Board, 8-Layer

Expansion Connectors

Document Number	750-2170-002-SCH	Rev	B
Date: Thursday, October 06, 2011		Sheet 13 of 14	

ECN-13455 - Changed C235 from 0.5pF capacitor to zero ohm resistor, and L2 from 5.1nH to 5.6nH inductor per results of RF performance testing.

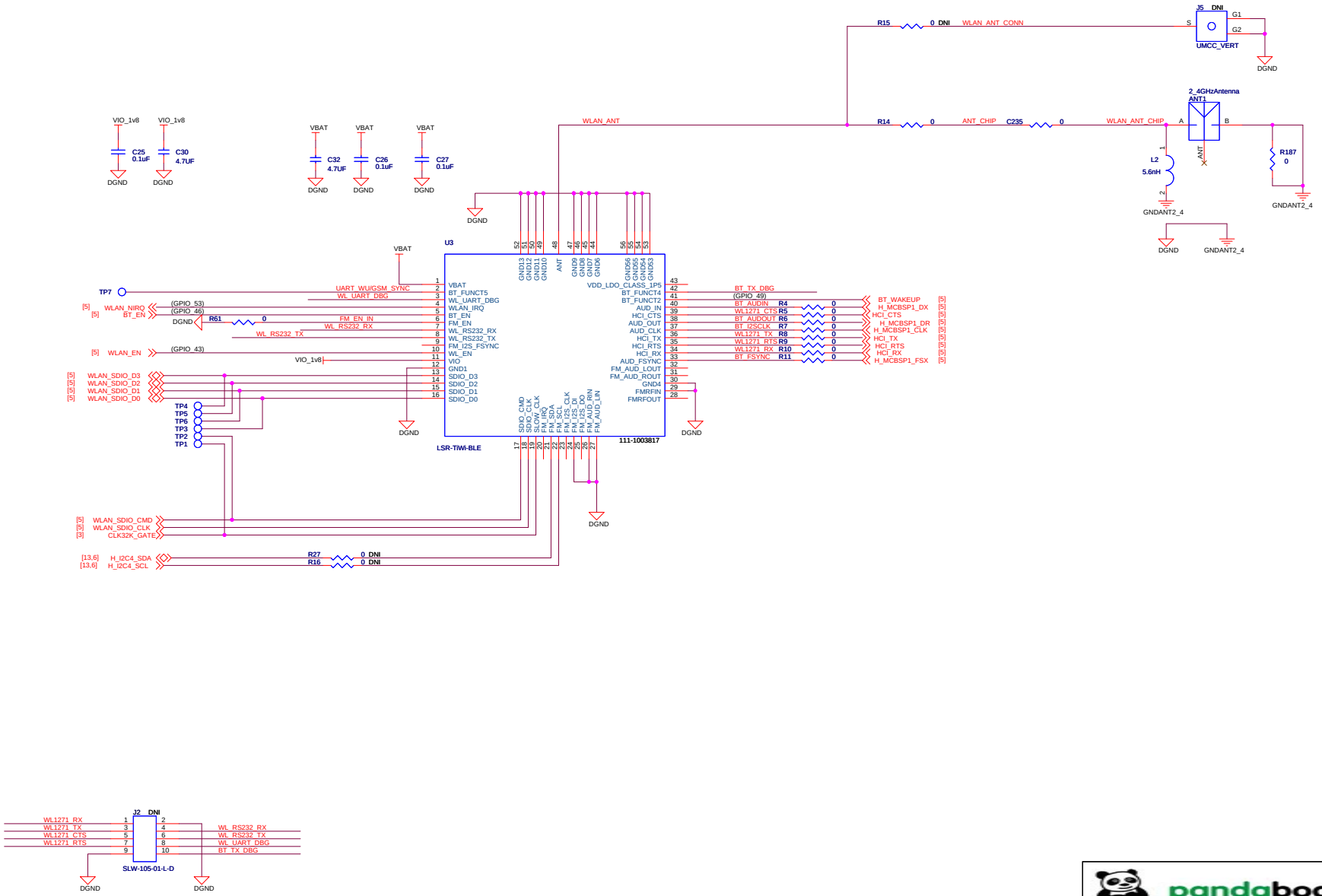

pandaboard.org	
OMAP4460 Panda Board, 8-Layer	
WLAN/Bluetooth/FM	
Document Number: 750-2170-002-SCH	Rev: B
Date: Thursday, October 06, 2011	Sheet 14 of 14