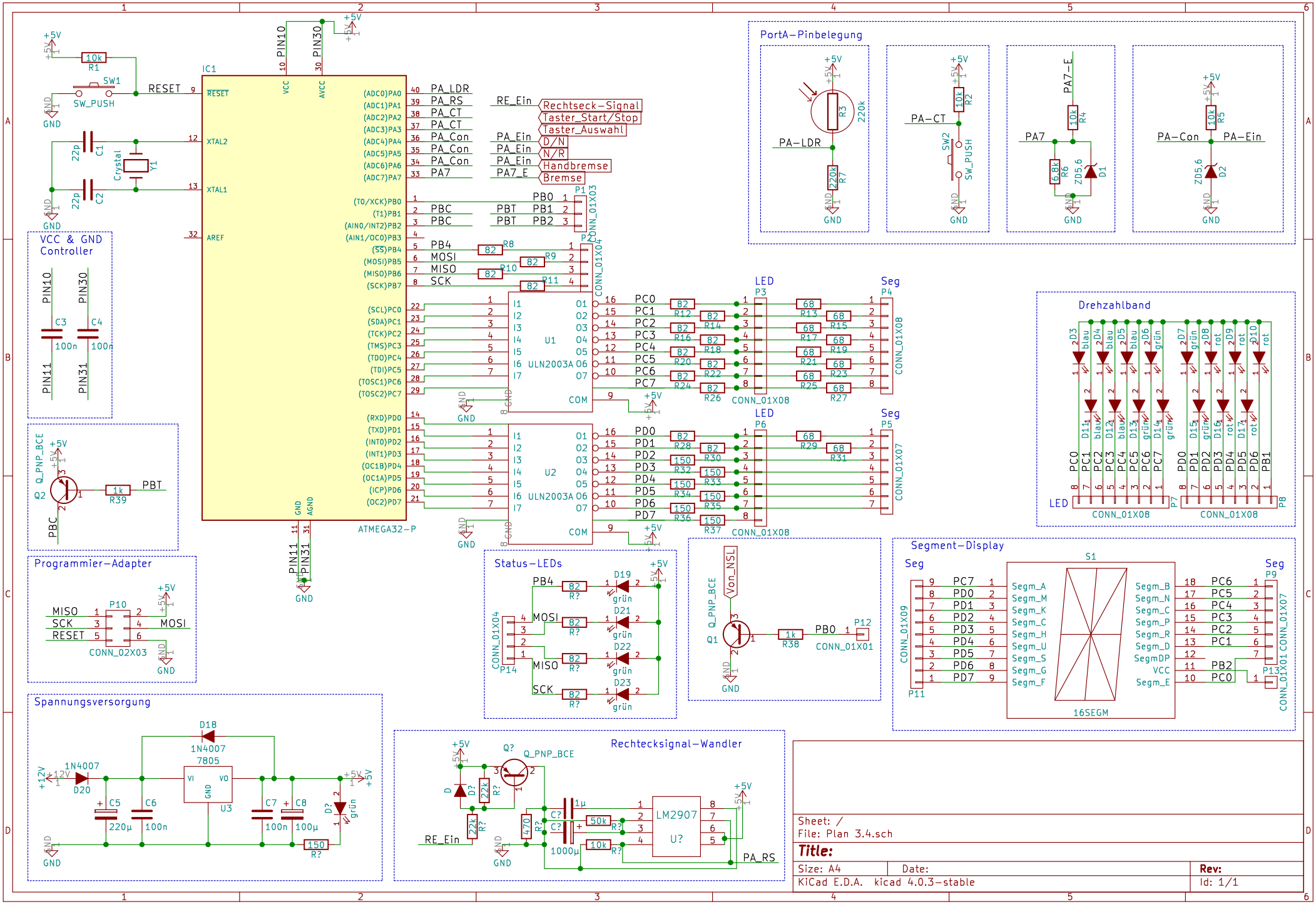
IC1
ATMEGA32-P
RESET
XTAL2
XTAL1
AREF
VCC
AVCC
GND
AGND
PIN10
PIN30
PIN11
PIN31
(ADC0)PA0 PA_LDR
(ADC1)PA1 PA_RS
(ADC2)PA2 PA_CT
(ADC3)PA3 PA_CT
(ADC4)PA4 PA_Con
(ADC5)PA5 PA_Con
(ADC6)PA6 PA_Con
(ADC7)PA7 PA7
(T0/XCK)PB0 PB0
(T1)PB1 PBC
(AIN0/INT2)PB2 PBC
(AIN1/OC0)PB3 PBT
(SS)PB4 PB4
(MOSI)PB5 MOSI
(MISO)PB6 MISO
(SCK)PB7 SCK
(SCL)PC0
(SDA)PC1
(TCK)PC2
(TMS)PC3
(TDO)PC4
(TDI)PC5
(TOSC1)PC6
(TOSC2)PC7
(RXD)PD0
(TXD)PD1
(INT0)PD2
(INT1)PD3
(OC1B)PD4
(OC1A)PD5
(ICP)PD6
(OC2)PD7
RE_Ein
Rechtseck-Signal
Taster_Start/Stop
Taster_Auswahl
PA_Ein D/N
PA_Ein N/R
PA_Ein Handbremse
PA7_E Bremse
PA_RS
PA_CT
PA_Con
PA_LDR
PBT
PC0 PC1 PC2 PC3 PC4 PC5 PC6 PC7
PD0 PD1 PD2 PD3 PD4 PD5 PD6 PD7
U1 ULN2003A
U2 ULN2003A
LED P3
Seg P4
LED P6
Seg P5
CONN_01X08
CONN_01X03
CONN_01X04
CONN_01X07
R1 10k
SW1 SW_PUSH
C1 22p
C2 22p
Y1 Crystal
C3 100n
C4 100n
VCC & GND Controller
Q2 Q_PNP_BCE
R39 1k
Programmier-Adapter
P10
MISO
SCK
RESET
MOSI
CONN_02X03
Spannungsversorgung
D18 1N4007
D20 1N4007
+12V
7805
U3
C5 220µ
C6 100n
C7 100n
C8 100µ
D? grün
150 R?
Rechtecksignal-Wandler
Q? Q_PNP_BCE
D? 22k R?
470 R?
C? 1µ
C? 1000µ
50k R?
10k R?
LM2907
U?
RE_Ein
PA_RS
Status-LEDs
PB4 D19 grün
MOSI D21 grün
MISO D22 grün
SCK D23 grün
82 R?
CONN_01X04
P14
Q1 Q_PNP_BCE
Von_NSL
1k R38
PB0 P12
CONN_01X01
PortA-Pinbelegung
PA-LDR R3 220k R7 220k
PA-CT R2 10k SW2 SW_PUSH
PA7 PA7-E R4 10k R6 6.8k ZD5,6 D1
PA-Con PA-Ein R5 10k ZD5,6 D2
Drehzahlband
LED
D3 blau
D4 blau
D5 blau
D6 grün
D7 grün
D8 rot
D9 rot
D10 rot
D11 blau
D12 blau
D13 grün
D14 grün
D15 grün
D16 rot
D17 rot
P7 CONN_01X08
P8 CONN_01X08
Segment-Display
Seg P11 CONN_01X09
S1 16SEGM
Segm_A Segm_M Segm_K Segm_C Segm_H Segm_U Segm_S Segm_G Segm_F
Segm_B Segm_N Segm_C Segm_P Segm_R Segm_D SegmDP VCC Segm_E
Seg P9 CONN_01X07
P13 CONN_01X01
Sheet: /
File: Plan 3.4.sch
Title:
Size: A4
Date:
Rev:
KiCad E.D.A. kicad 4.0.3-stable
Id: 1/1