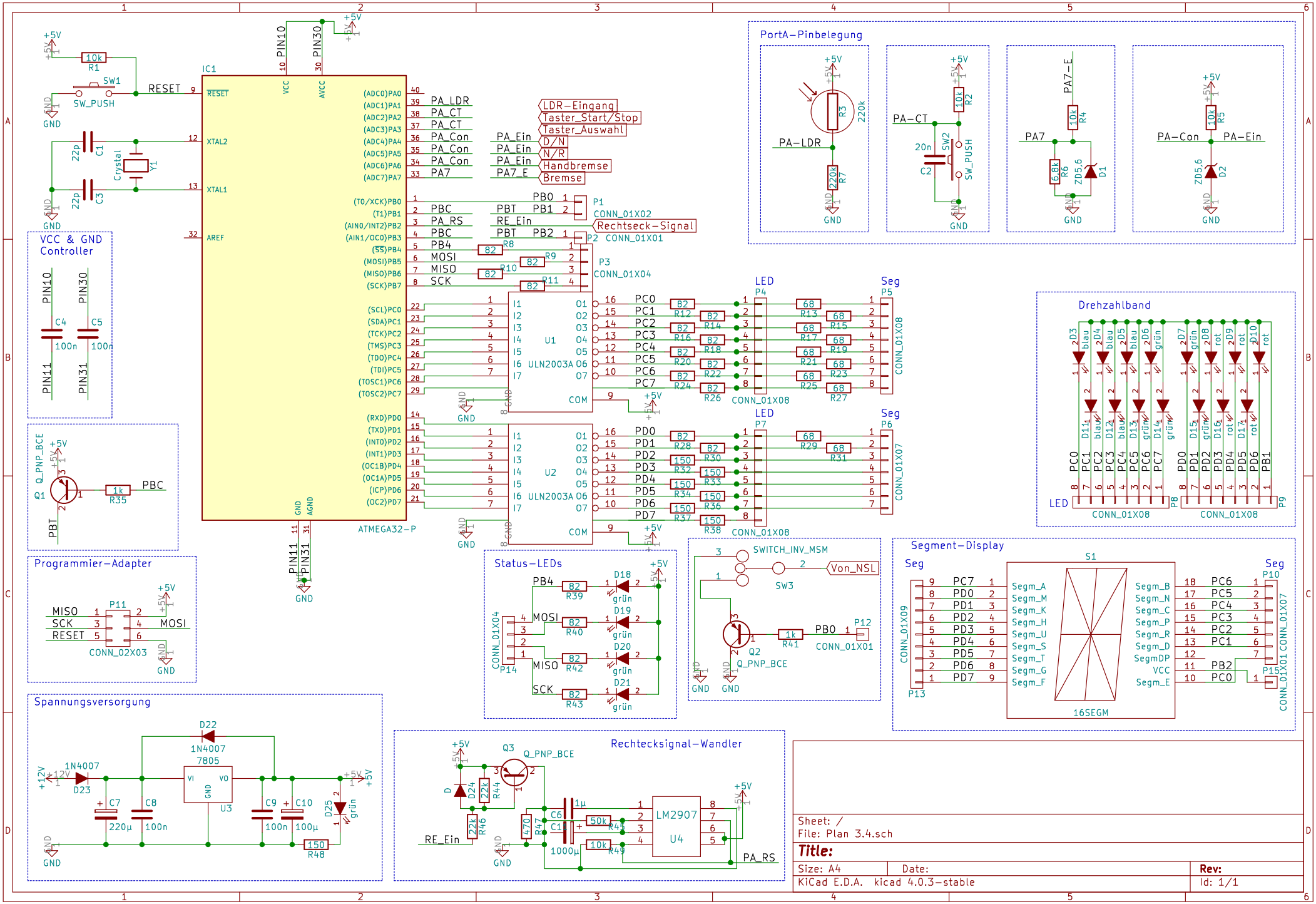
IC1
ATMEGA32-P
RESET
SW1
SW_PUSH
R1 10k
XTAL2
XTAL1
Crystal Y1
C1 22p
C3 22p
AREF
VCC
AVCC
PIN10
PIN30
PIN11
PIN31
GND
AGND
(ADC0)PA0 PA_LDR
(ADC1)PA1 PA_CT
(ADC2)PA2 PA_CT
(ADC3)PA3 PA_Con
(ADC4)PA4 PA_Con
(ADC5)PA5 PA_Con
(ADC6)PA6
(ADC7)PA7 PA7
(T0/XCK)PB0 PB0
(T1)PB1 PBT
(AIN0/INT2)PB2 PA_RS
(AIN1/OC0)PB3 PBC
(SS)PB4 PB4
(MOSI)PB5 MOSI
(MISO)PB6 MISO
(SCK)PB7 SCK
(SCL)PC0
(SDA)PC1
(TCK)PC2
(TMS)PC3
(TDO)PC4
(TDI)PC5
(TOSC1)PC6
(TOSC2)PC7
(RXD)PD0
(TXD)PD1
(INT0)PD2
(INT1)PD3
(OC1B)PD4
(OC1A)PD5
(ICP)PD6
(OC2)PD7
LDR-Eingang
Taster_Start/Stop
Taster_Auswahl
PA_Ein D/N
PA_Ein N/R
PA_Ein Handbremse
PA7_E Bremse
P1 CONN_01X02
Rechtseck-Signal
P2 CONN_01X01
P3 CONN_01X04
R8 82
R9 82
R10 82
R11 82
U1 ULN2003A
U2 ULN2003A
PC0 PC1 PC2 PC3 PC4 PC5 PC6 PC7
PD0 PD1 PD2 PD3 PD4 PD5 PD6 PD7
R12 82 R14 82 R16 82 R18 82 R20 82 R22 82 R24 82 R26 82
R28 82 R30 150 R32 150 R33 150 R34 150 R36 150 R37 150 R38 150
R13 68 R15 68 R17 68 R19 68 R21 68 R23 68 R25 68 R27 68
R29 68 R31 68
P4 LED CONN_01X08
P5 Seg CONN_01X08
P7 LED CONN_01X08
P6 Seg CONN_01X07
VCC & GND Controller
C4 100n
C5 100n
Q1 Q_PNP_BCE
R35 1k
Programmier-Adapter
P11 CONN_02X03
MISO
SCK
RESET
MOSI
Status-LEDs
P14 CONN_01X04
D18 grün
D19 grün
D20 grün
D21 grün
R39 82
R40 82
R42 82
R43 82
SWITCH_INV_MSM
SW3
Von_NSL
Q2 Q_PNP_BCE
R41 1k
P12 CONN_01X01
PortA-Pinbelegung
PA-LDR
R3 220k
R7 220k
PA-CT
R2 10k
SW2 SW_PUSH
C2 20n
PA7
PA7-E
R4 10k
R6 6.8k
ZD5,6 D1
PA-Con
PA-Ein
R5 10k
ZD5,6 D2
Drehzahlband
LED
P8 CONN_01X08
P9 CONN_01X08
Segment-Display
Seg P13 CONN_01X09
S1 16SEGM
Seg P10 CONN_01X07
P15 CONN_01X01
Spannungsversorgung
+12V
D23 1N4007
D22 1N4007
7805 U3
C7 220µ
C8 100n
C9 100n
C10 100µ
D25 grün
R48 150
Rechtecksignal-Wandler
Q3 Q_PNP_BCE
D24
R44 22k
R46 22k
RE_Ein
R47 470
C6 1µ
C11 1000µ
R45 50k
R49 10k
LM2907 U4
PA_RS
Sheet: /
File: Plan 3.4.sch
Title:
Size: A4
Date:
Rev:
KiCad E.D.A. kicad 4.0.3-stable
Id: 1/1