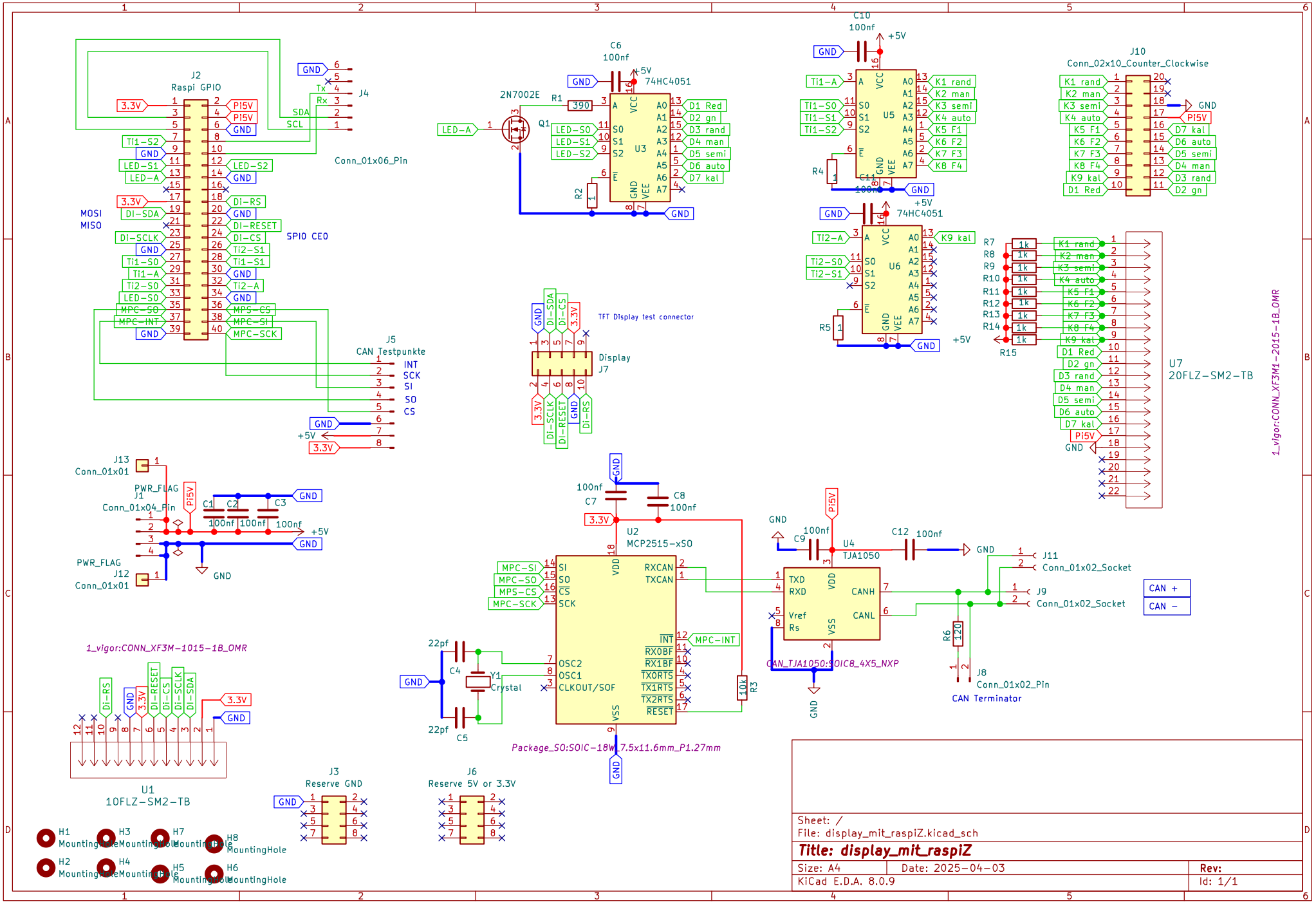
J2
Raspi GPIO
Conn_01x06_Pin
J4
SPI0 CE0
MOSI
MISO
J5
CAN Testpunkte
INT
SCK
SI
SO
CS
2N7002E
Q1
R1
390
R2
C6
100nf
74HC4051
U3
C10
100nf
U5
R4
U6
R5
R7
R8
R9
R10
R11
R12
R13
R14
R15
1k
J10
Conn_02x10_Counter_Clockwise
U7
20FLZ-SM2-TB
1_vigor:CONN_XF3M1-2015-1B_OMR
TFT Display test connector
Display
J7
J13
Conn_01x01
PWR_FLAG
J1
Conn_01x04_Pin
C1
C2
C3
100nf
J12
Conn_01x01
U2
MCP2515-xSO
C7
C8
22pf
C4
C5
Y1
Crystal
Package_SO:SOIC-18W_7.5x11.6mm_P1.27mm
R3
10k
C9
U4
TJA1050
C12
J11
Conn_01x02_Socket
J9
Conn_01x02_Socket
CAN_TJA1050:SOIC8_4X5_NXP
R6
120
J8
Conn_01x02_Pin
CAN Terminator
CAN +
CAN -
1_vigor:CONN_XF3M-1015-1B_OMR
U1
10FLZ-SM2-TB
J3
Reserve GND
J6
Reserve 5V or 3.3V
H1
H2
H3
H4
H5
H6
H7
H8
MountingHole
Sheet: /
File: display_mit_raspiZ.kicad_sch
Title: display_mit_raspiZ
Size: A4
Date: 2025-04-03
Rev:
KiCad E.D.A. 8.0.9
Id: 1/1