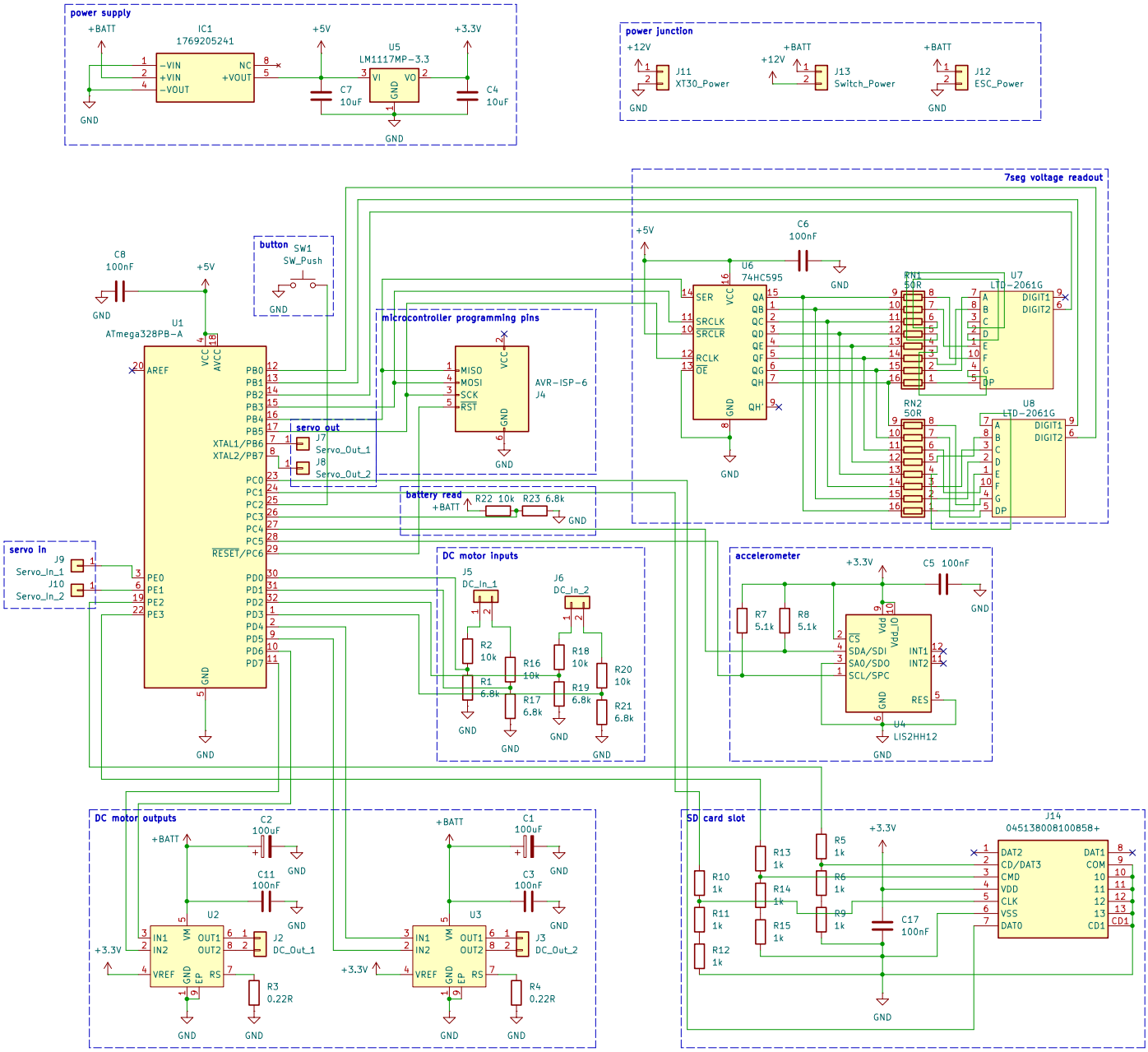
power supply
+BATT
IC1
1769205241
-VIN
+VIN
-VOUT
NC
+VOUT
GND
+5V
U5
LM1117MP-3.3
VI
VO
GND
C7
10uF
C4
10uF
+3.3V
power junction
+12V
J11
XT30_Power
+BATT
J13
Switch_Power
J12
ESC_Power
7seg voltage readout
C6
100nF
U6
74HC595
SER
SRCLK
SRCLR
RCLK
OE
QA
QB
QC
QD
QE
QF
QG
QH
QH'
VCC
RN1
50R
RN2
50R
U7
LTD-2061G
U8
LTD-2061G
DIGIT1
DIGIT2
button
SW1
SW_Push
C8
100nF
U1
ATmega328PB-A
AREF
VCC
AVCC
PB0
PB1
PB2
PB3
PB4
PB5
XTAL1/PB6
XTAL2/PB7
PC0
PC1
PC2
PC3
PC4
PC5
RESET/PC6
PD0
PD1
PD2
PD3
PD4
PD5
PD6
PD7
PE0
PE1
PE2
PE3
microcontroller programming pins
MISO
MOSI
SCK
RST
AVR-ISP-6
J4
servo out
J7
Servo_Out_1
J8
Servo_Out_2
battery read
R22 10k
R23 6.8k
servo in
J9
Servo_In_1
J10
Servo_In_2
DC motor inputs
J5
DC_In_1
J6
DC_In_2
R2
10k
R1
6.8k
R16
10k
R17
6.8k
R18
10k
R19
6.8k
R20
10k
R21
6.8k
accelerometer
R7
5.1k
R8
5.1k
C5 100nF
CS
SDA/SDI
SAO/SDO
SCL/SPC
Vdd
Vdd_IO
INT1
INT2
RES
U4
LIS2HH12
DC motor outputs
C2
100uF
C11
100nF
U2
IN1
IN2
VM
OUT1
OUT2
VREF
GND
EP
RS
J2
DC_Out_1
R3
0.22R
C1
100uF
C3
100nF
U3
J3
DC_Out_2
R4
0.22R
SD card slot
J14
045138008100858+
DAT2
CD/DAT3
CMD
VDD
CLK
VSS
DAT0
DAT1
COM
CD1
R13
1k
R14
1k
R15
1k
R10
1k
R11
1k
R12
1k
R5
1k
R6
1k
R9
1k
C17
100nF