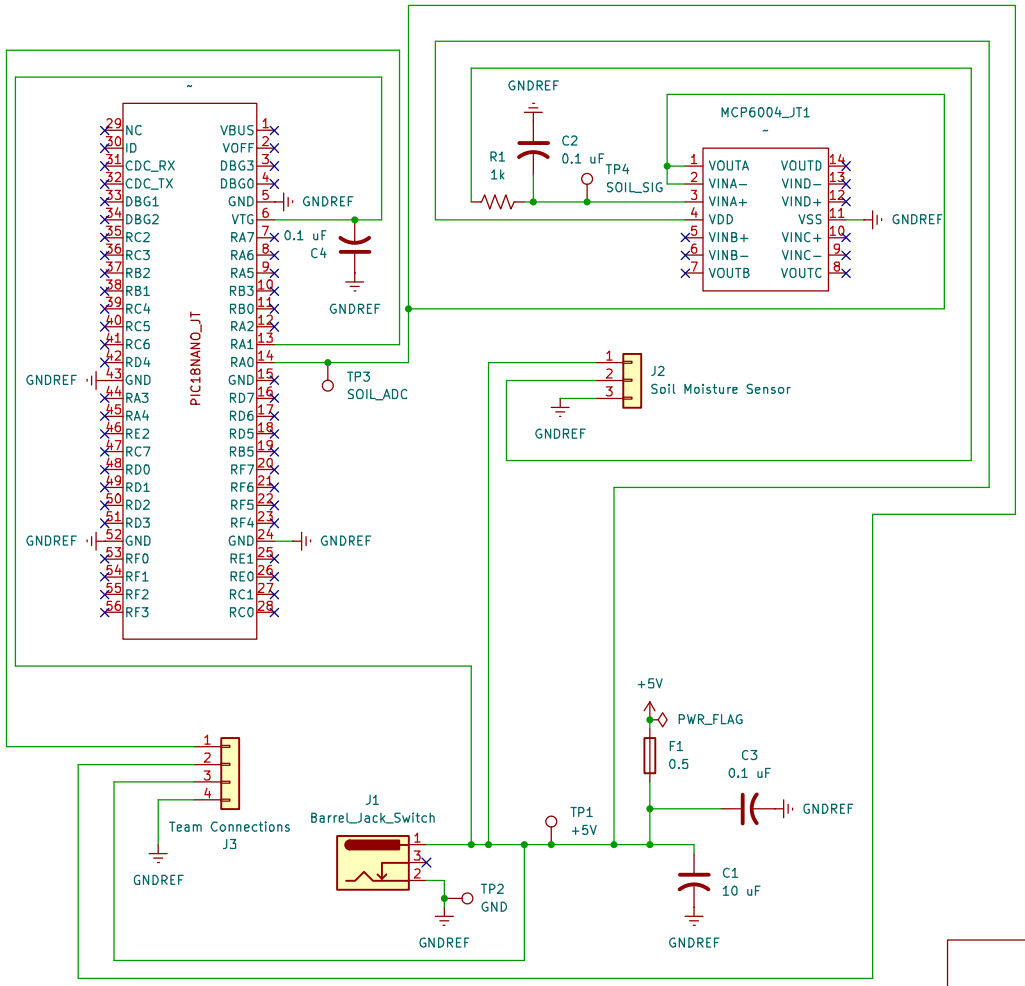

Team 106

Sheet: /

File: Subsystem Schematic Design.kicad_sch

Title: Soil Moisture Sensor Schematic

Size: A4	Date: 10-20-25	**Rev:**
KiCad E.D.A. 9.0.4		Id: 1/1