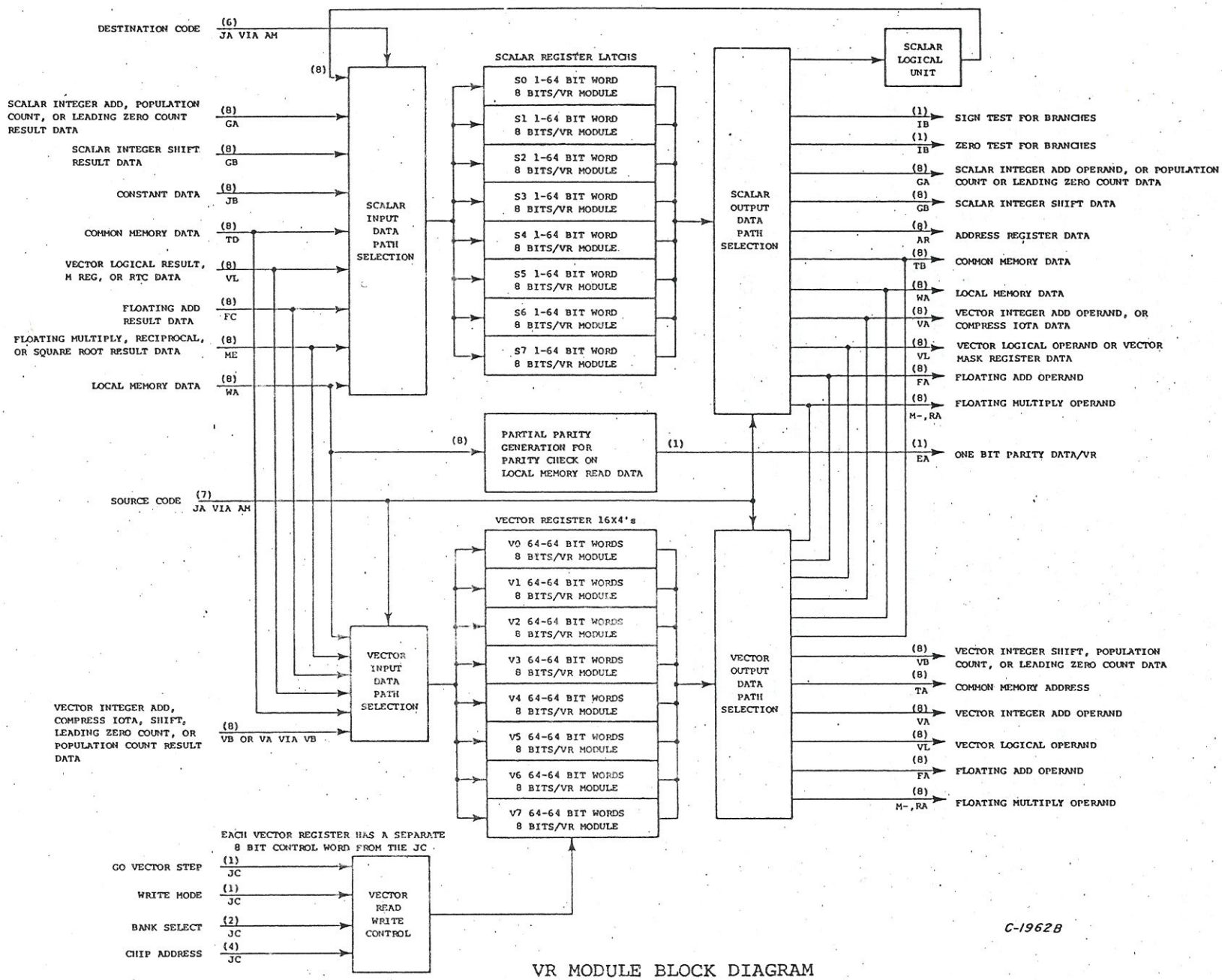

VR MODULE BLOCK DIAGRAM