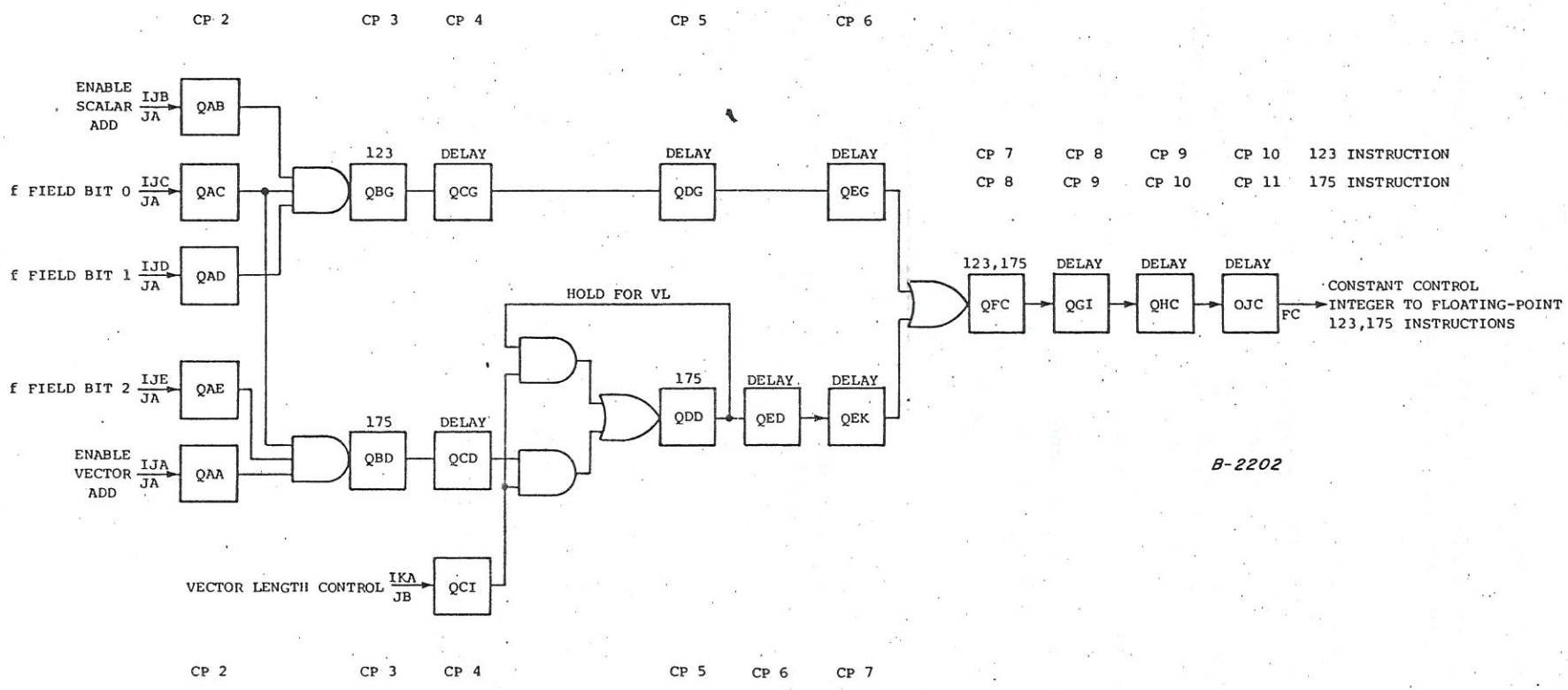

FA MODULE INTEGER TO FLOATING-POINT
CONSTANT CONTROL TO FC