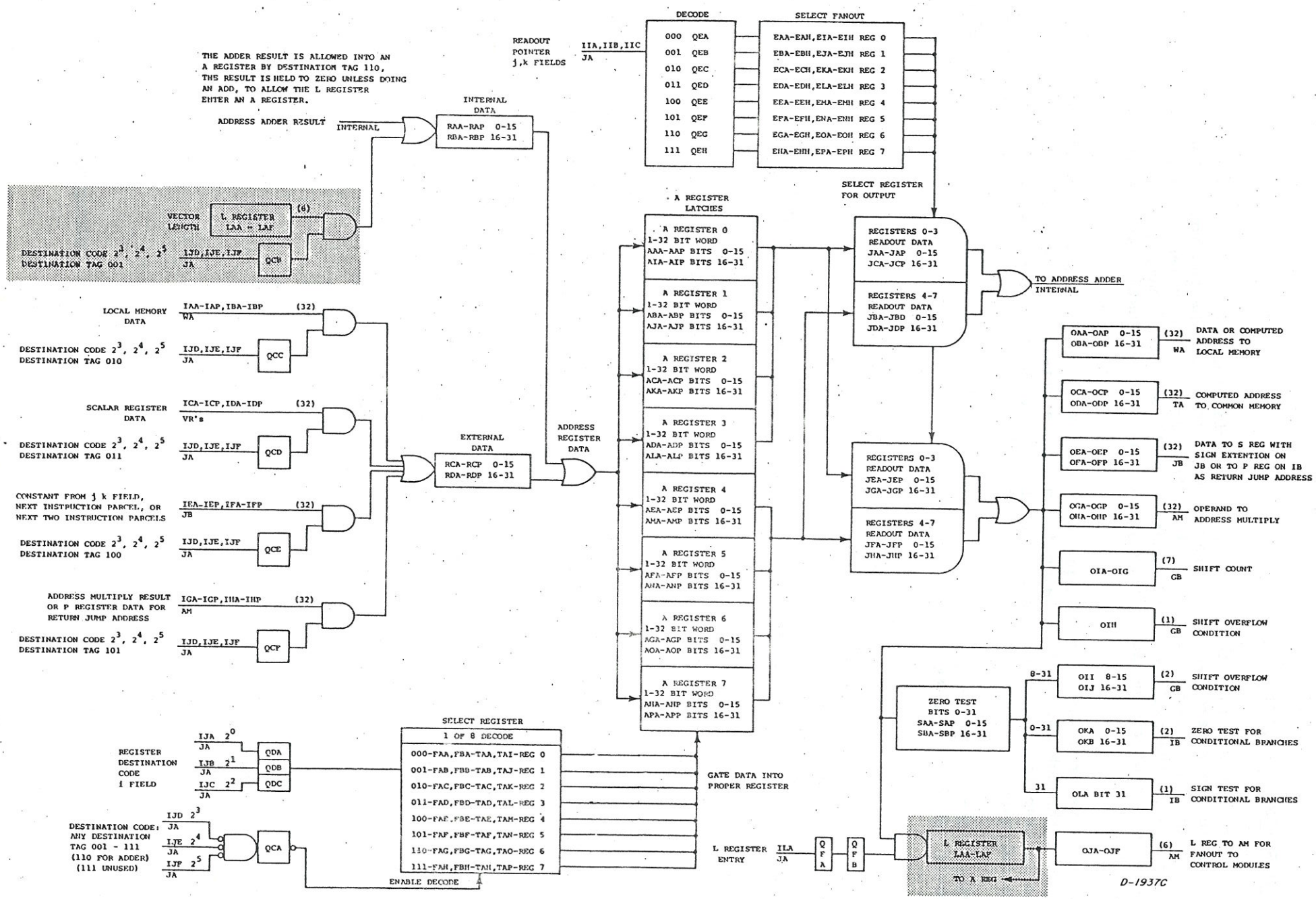

AR MODULE ADDRESS AND VECTOR LENGTH REGISTERS