28 n sec

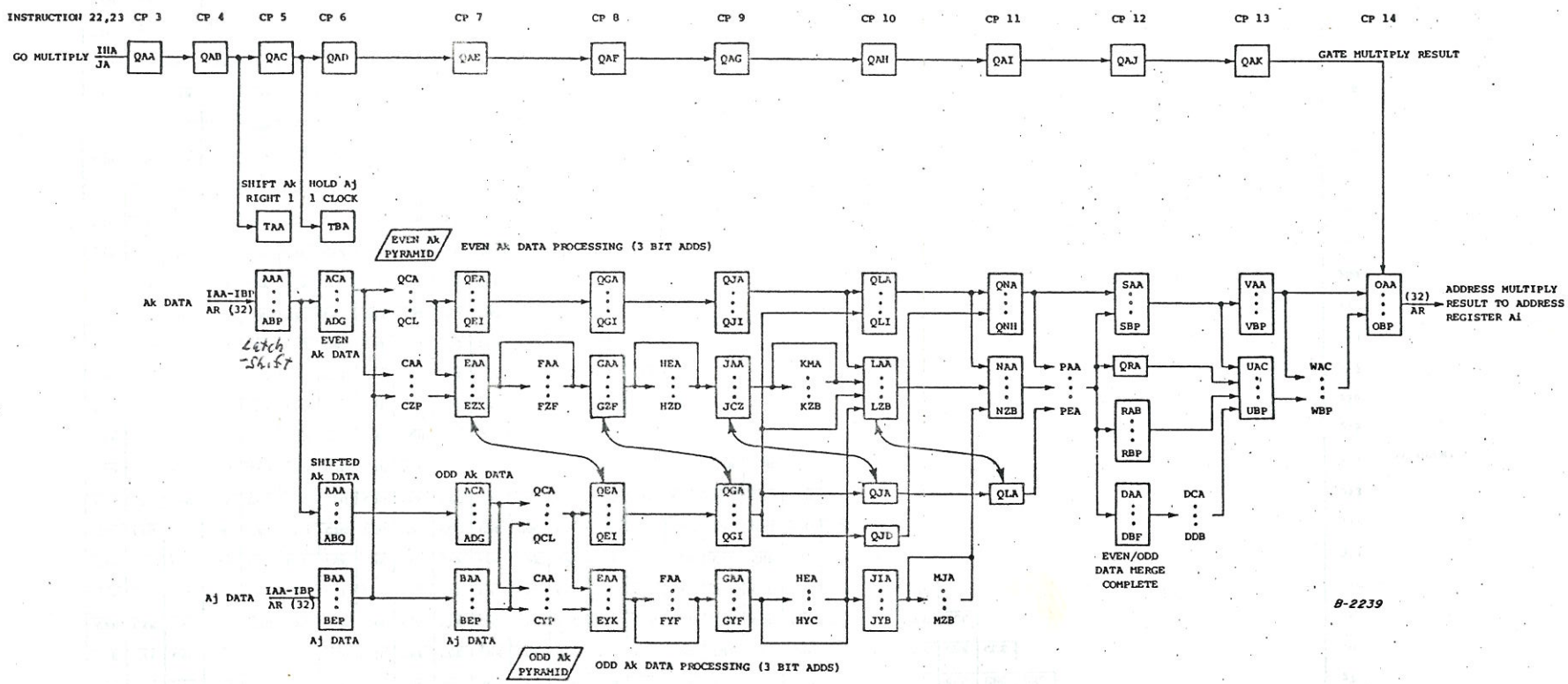

AM MODULE ADDRESS MULTIPLY
MATRIX AND CONTROL