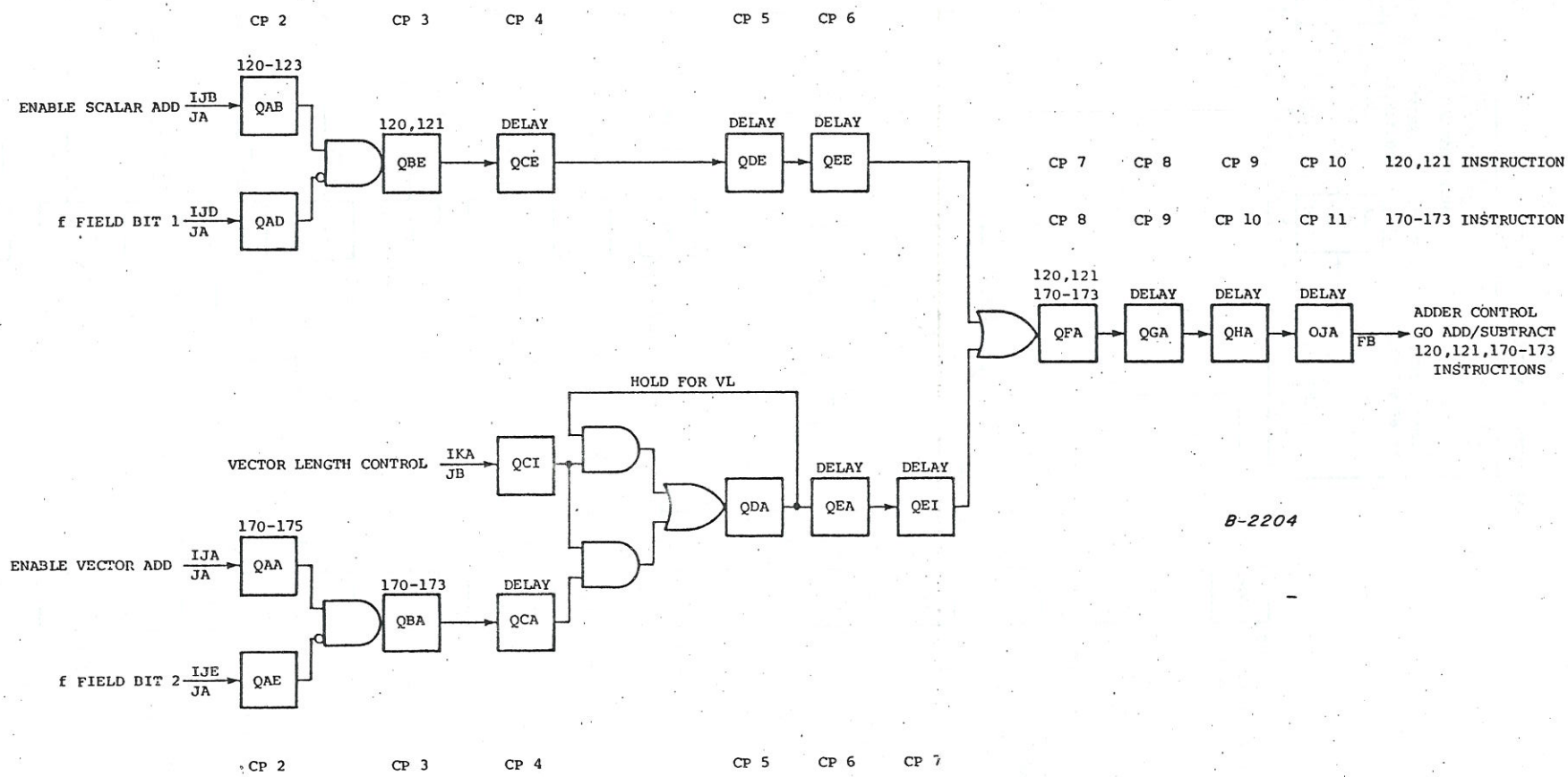

FA MODULE ADDER CONTROL TO FB