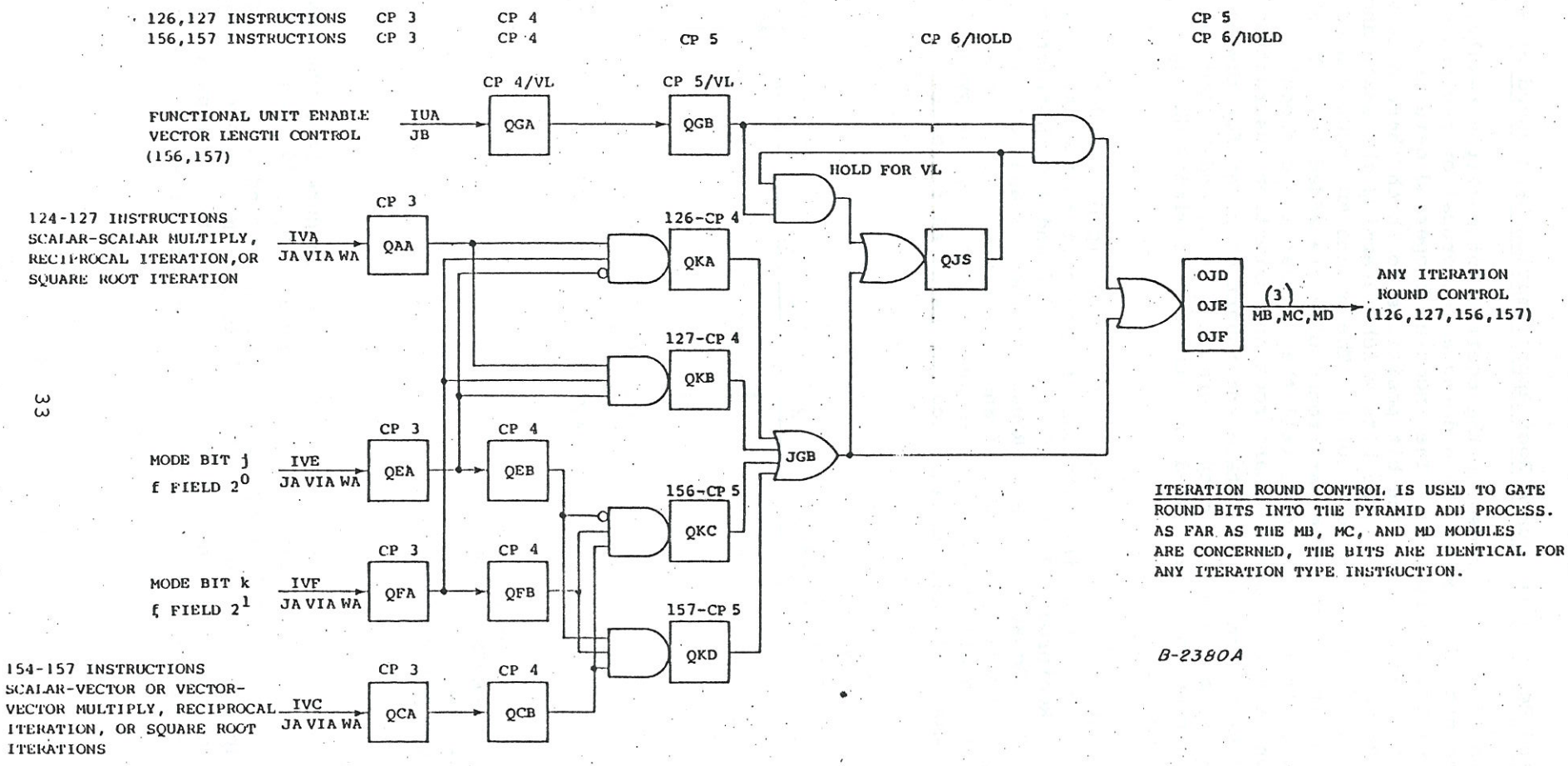

ME MODULE ANY ITERATION
ROUND CONTROL