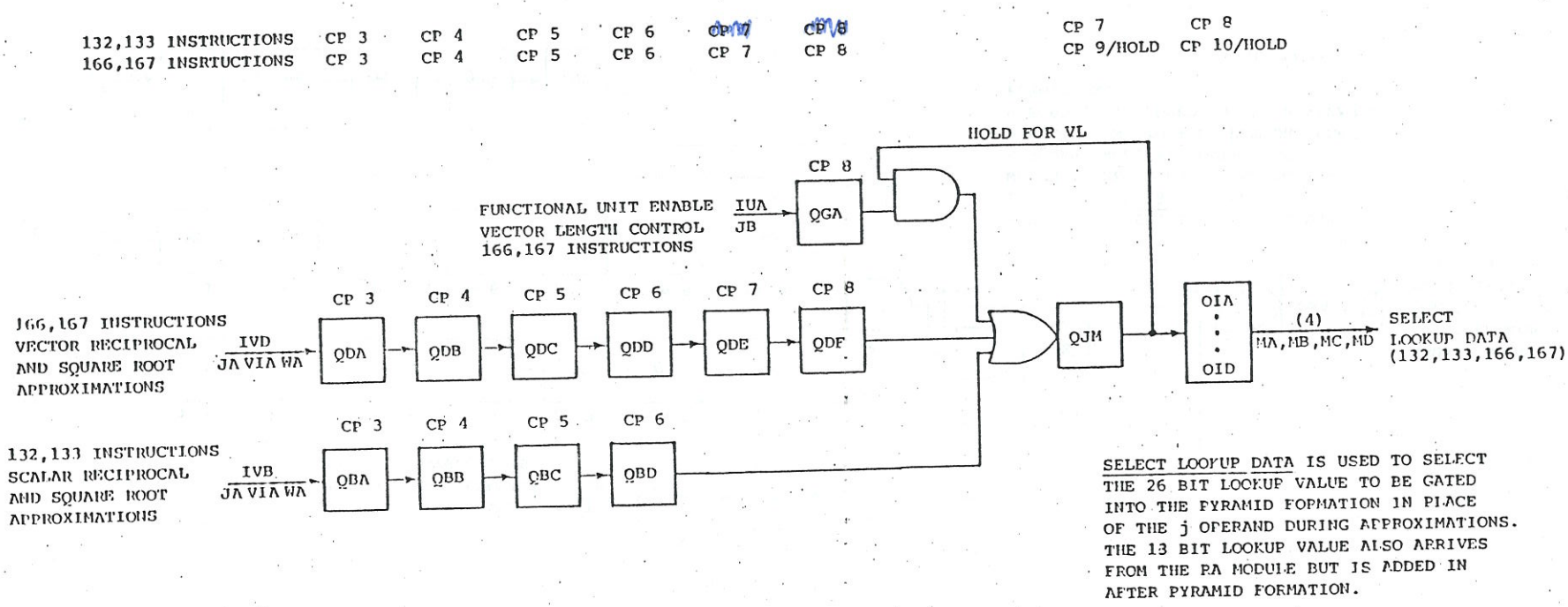

SELECT LOOKUP DATA IS USED TO SELECT THE 26 BIT LOOKUP VALUE TO BE GATED INTO THE PYRAMID FORMATION IN PLACE OF THE j OPERAND DURING APPROXIMATIONS. THE 13 BIT LOOKUP VALUE ALSO ARRIVES FROM THE RA MODULE BUT IS ADDED IN AFTER PYRAMID FORMATION.

ME MODULE SELECT LOOKUP DATA

B-2357A