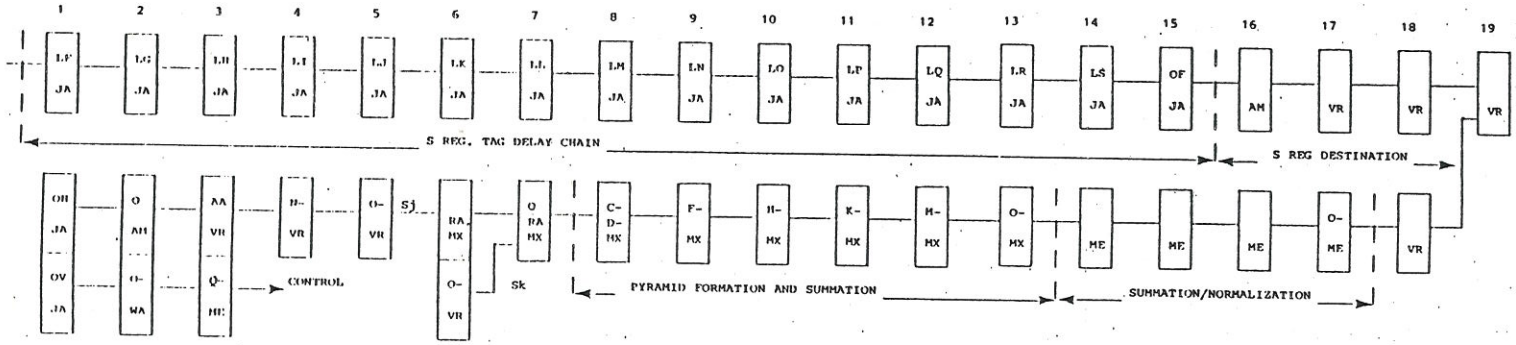

SCALAR MULTIPLY AND SCALAR RECIPROCAL/SQUARE ROOT ITERATION (124-127 INSTRUCTIONS)

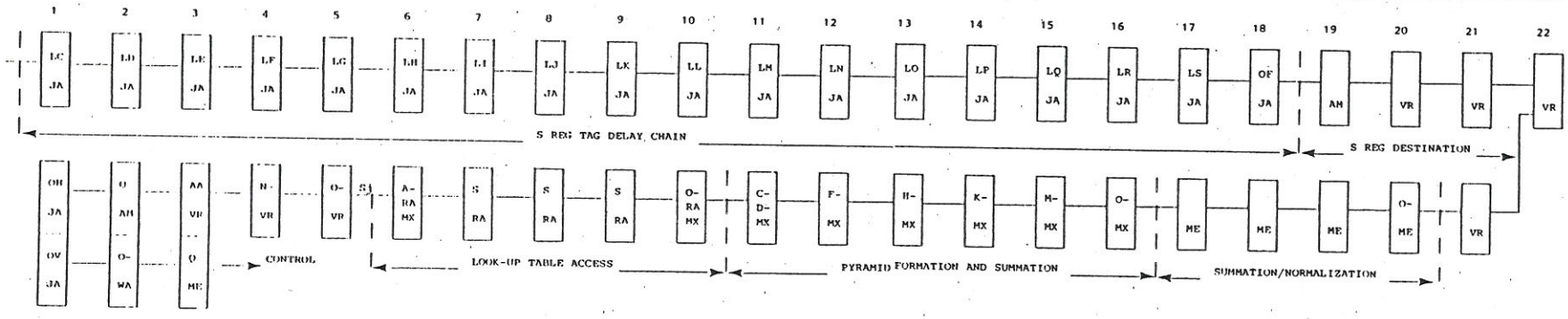

SCALAR RECIPROCAL/SQUARE ROOT APPROXIMATION (132,133 INSTRUCTIONS)

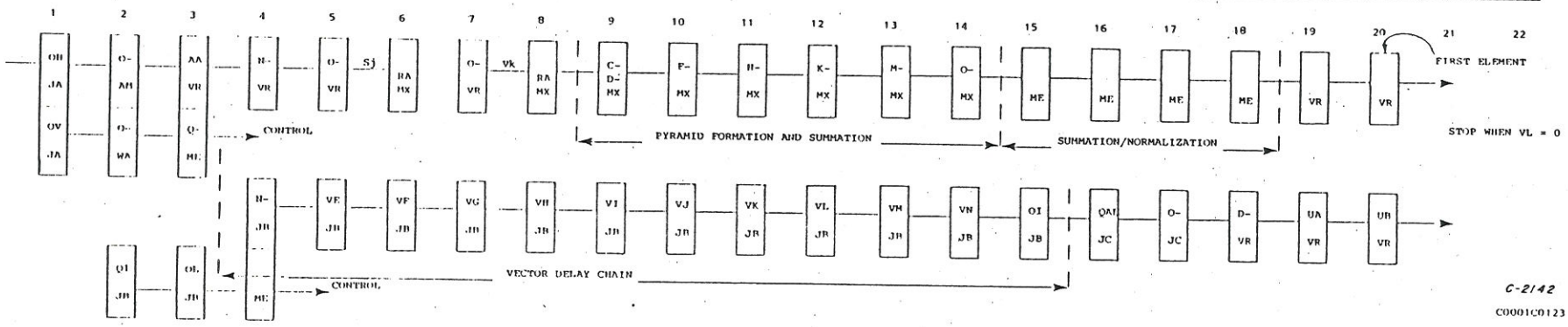

VECTOR/SCALAR MULTIPLY (154 INSTRUCTION)

INSTRUCTION TIMING (SHEET 1 of 2)