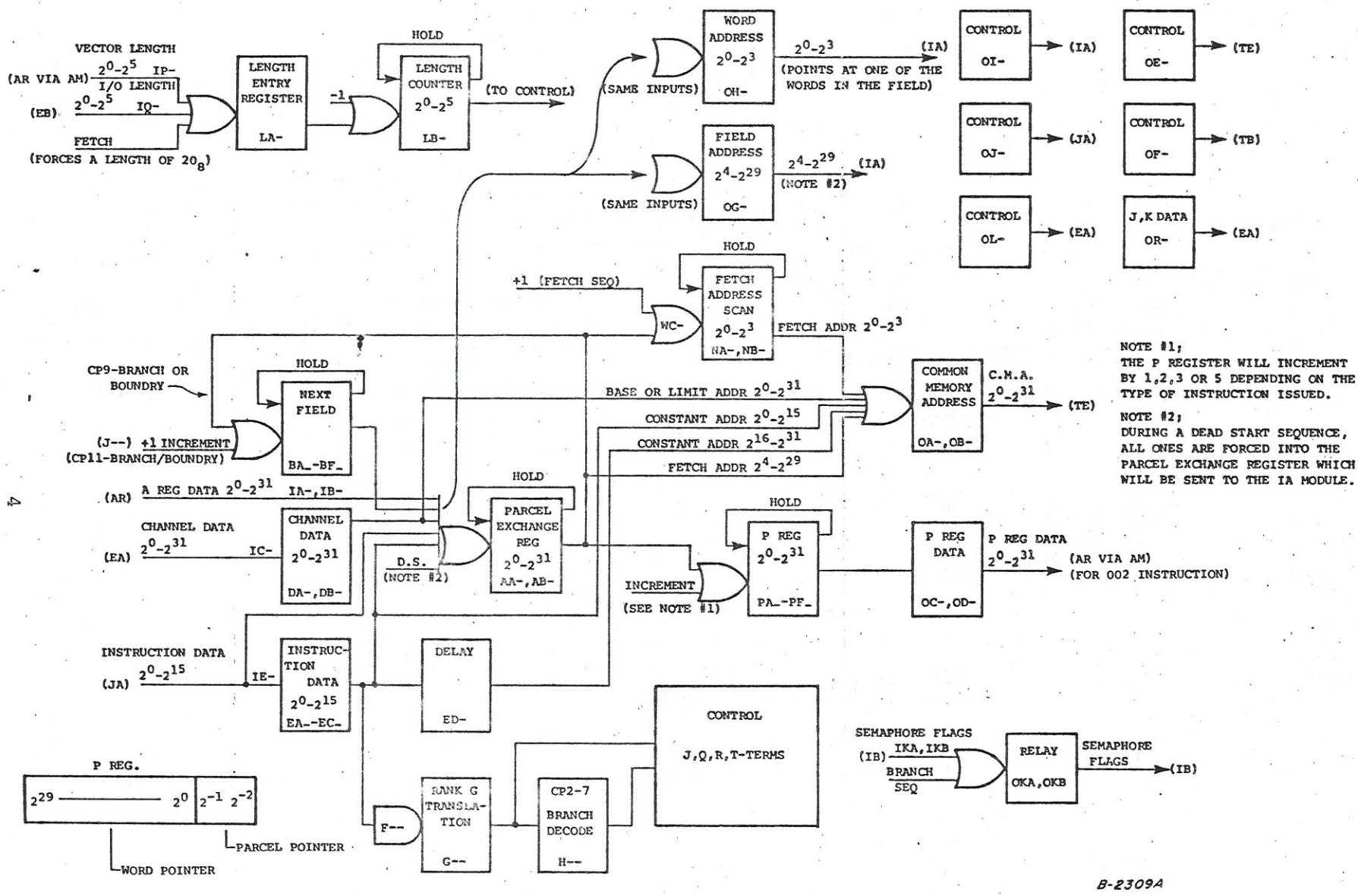

NOTE #1;
THE P REGISTER WILL INCREMENT BY 1,2,3 OR 5 DEPENDING ON THE TYPE OF INSTRUCTION ISSUED.

NOTE #2;
DURING A DEAD START SEQUENCE, ALL ONES ARE FORCED INTO THE PARCEL EXCHANGE REGISTER WHICH WILL BE SENT TO THE IA MODULE.

IB MODULE DIAGRAM