CPE 4810 - Senior Design Project I, Spring 2026

Product Requirements Document

Life Loop

Short Circuit

Justin Turner, Ethan Karnes, Jesse Garcia, Elijah Epps

Rev. – Final 5

Date: April 21, 2026

Electrical and Computer Engineering

Kennesaw State University

Faculty: Dr. Jeffrey L Yiin

Revision History

Name	Date	Reason For Changes	Version
Ethan Karnes	03-31-2026	Initial layout; Added diagrams	Rev. - Draft
Justin Turner	03-31-2026	Began introduction and added product description	Rev. – Draft 1
Jesse Garcia	04-01-2026	Finished Sections III and IV	Rev. – Draft 2
Elijah Epps	04-01-2026	Added to Product Specifications	Rev. – Draft 3
Ethan Karnes	04-01-2026	Completed Section V	Rev. – Draft 4
Justin Turner	04-01-2026	Completed Section VI	Rev. – Draft 5
Ethan Karnes	04-02-2026	Completed Introduction and Section II	Rev. – Draft 6
Justin Turner	04-02-2026	Formatted and Finalized the Draft	Rev. – Draft 7
Ethan Karnes	04-17-2026	Updated Subsystem Diagrams	Rev. – Final 1
Elijah Epps	04-20-2026	Updated Product Specifications/Requirements	Rev. – Final 2
Jesse Garcia	04-20-2026	Updated Sections I, II, & IV	Rev. – Final 3
Ethan Karnes	04-20-2026	Fixed Formatting and Typos	Rev. – Final 4
Justin Turner	04-21-2026	Updated Title Page and Finalized Document	Rev. – Final 5

Table of Contents

I. Introduction *5*

1. **Product Description** **5**
3. **Value Proposition:** **5**
4. **Validated Insights** **5**
5. **Product Visualization** **9**

II. Product Specifications/Requirements *10*

III. System Architecture *12*

1. **Main System Block Diagrams** **12**
   - **Main Architecture Diagram** 12
   - **On-Device Software Block Diagram** 13
2. **Subsystem Diagrams:** **13**
   - **Battery Management System Block Diagram** 13
   - **Sensor Module Block Diagram** 14
   - **Input and Output Block Diagram** 14
   - **Communication Module Block Diagram** 15
   - **App Diagram** 16
3. **Use Case Analysis** **16**
   - **Use Case 1** 16
   - **Use Case 2** 17
   - **Use Case 3** 18
4. **Preliminary Bill of Materials (BOM)** **19**

IV. Subsystem Design Specifications *20*

1. **Sensor Subsystem** **20**
2. **Battery Management Subsystem** **21**
3. **Communication Subsystem** **21**
4. **Input and Output** **21**

V. Relevant Engineering Standards *22*

VI. Realistic Constraints and Design Impact *24*

Bibliography *25*

List of Figures

Figure 1: Rugged vs Simple Design Feedback 6
Figure 2: Wrist Space Availability Question Feedback 7
Figure 3: Top Three Customer Needs in a Wearable 8
Figure 4: Life Loop Visual 9
Figure 5: Life Loop "Billboard" 9
Figure 6: Main Architecture Diagram 12
Figure 7: On-Device Software Block Diagram 13
Figure 8: Battery Management System Diagram 13
Figure 9: Sensor Module Diagram 14
Figure 10: Input and Output Diagram 14
Figure 11: Communication Diagram 15
Figure 12: Life Loop App Diagram 16
Figure 13: Use Case 1 Swimlane Diagram 17
Figure 14: Use Case 2 Swimlane Diagram 18
Figure 15: Use Case 3 Swimlane Diagram 19

List of Tables

Table 1: Product Requirements 10
Table 2: Bill of Materials 19
Table 3: Engineering Standards 22
Table 4: Realistic Constraints & Design Impacts 24

I. Introduction

1. Product Description:

Life Loop is a discreet, wearable device that continuously monitors a loved one's location and vitals, instantly alerting a shared family network and Ems if a health crisis or fall occurs.

2. Feature Set

Life Loop is designed with the following features:

- Sleek and stylish design: The device will be a compact wearable that fits comfortably around the user's wrist and will be designed to be unobtrusive while also being free of any complex interface.
- Real-Time Location Tracking: The wearer's geographic coordinates are actively monitored by the device. This feature guarantees that the wearer's location is always precise, whether family members are using the app or emergency services are reacting to an alert.
- Fall Detection: The device instantaneously detects when a fall has happened by automatically tracking the wearer's body orientation. Without requiring the wearer to physically click a button, it initiates the required emergency procedures as soon as an impact is detected.
- Heart Rate Analyzation: In order to identify any medical emergencies, the device continuously assesses the wearer's pulse. The gadget will alert the family network right away if it detects significantly increased or extremely low heart rates.
- Life Loop App: The app is the place where all of the up to date sensor data will be held. Users in the family will be able to use the app to check the status of their loved ones along with specific motion, heart rate, and GPS data.
- Automatic Emergency Calls: In the case of an emergency, the device will alert the family members via the app. They can choose to cancel the alert if the situation isn't dire. If no member responds or cancels the alert, the system will automatically call emergency services.

3. Value Proposition:

Our value proposition is: "A wellness network that keeps families alert and aware to medical emergencies anytime and anywhere." With Life Loop we want an easy, convenient, and connected way to check on those you love both quickly and from anywhere.

4. Validated Insights:

After we interviewed our potential customers and wearers of the product, we started to review the feedback. Across the data we gathered an overwhelming majority of our assumptions were validated.

A few major points that we heard many times during interviews were that of the physical needs of the device. Mainly, we heard that the device needed to be comfortable, subtle, and accessible. This validated our early design of a simple "band" design where we tried to keep the device as simple as possible but did make us think about how simplicity might be better than adding a ton of features. A few of the interviewees suggested a more rugged design, as their parents were still working or were more physical. Nine out of the twelve people we interviewed said that a simple design would be better suited with the other four people saying a rugged design would fit their needs better.

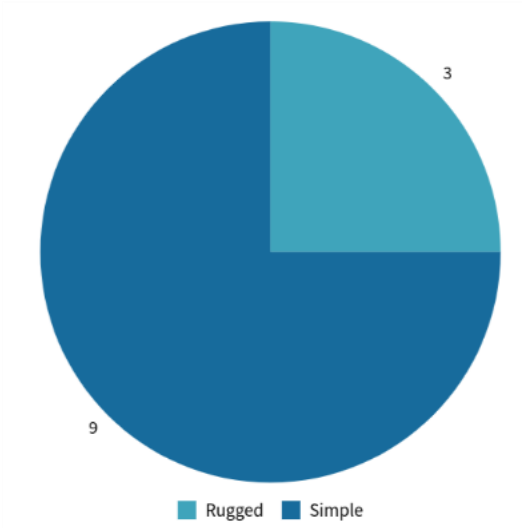

Figure 1: Rugged vs Simple Design Feedback

We found that after tallying the data, half of those surveyed had parents that wore something on their wrist already. This invalidated assumption leads us to value the physical nature of the device even more because now we know that we might be "fighting" for wrist space. We also consider that the customers' parents might wear something on only one wrist, leaving the opposite wrist open. This is something we keep in mind going forward.

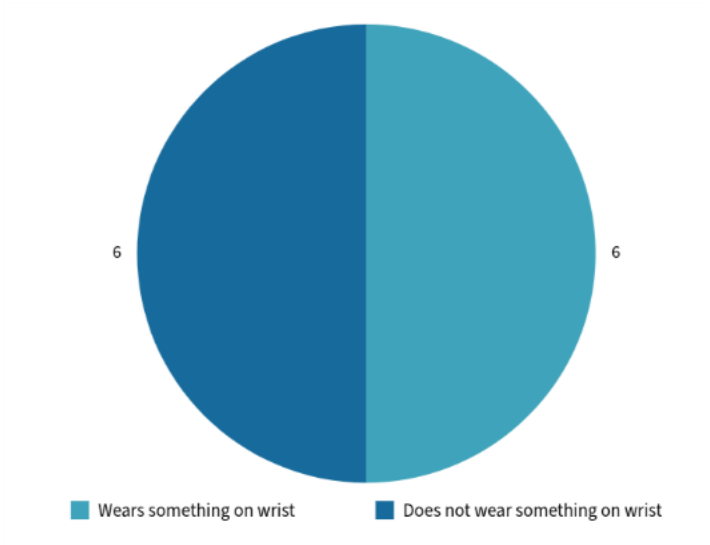

Figure 2: Wrist Space Availability Question Feedback

Another point that was heard a few times during interviews was that of data privacy. Some customers were concerned about the data being collected and this point, although less thought about, totally resonated with us. Despite it being closer to a feasibility issue, we still discussed privacy and how it is a very real unspoken "feature" of any device. This was a somewhat unexpected point that our potential customers brought up, and it will shape our implementation should we move forward.

Another unexpected insight we discovered was that many people we spoke with were interested in fitness-related features, such as tracking calories and movement. We initially overlooked this because our focus was on wellness-checking features. However, this is something we can consider including as we move forward with the product.

Our top feedback we got was to keep the device comfortable, cost-effective, and usable. Eleven out of the twelve people we interviewed said that a top concern with them would be comfort, ten out of twelve said that cost-effectiveness is a large concern, and a simple design had nine voices of concern. The next biggest concern was battery life, which is something that leans into the feasibility of the device, but we still found it very valuable as feedback. Lastly, the cost was brought up quite a lot during the interviews and it is something that we have noted down. Potential customers want a cost-effective solution and voiced that clearly.

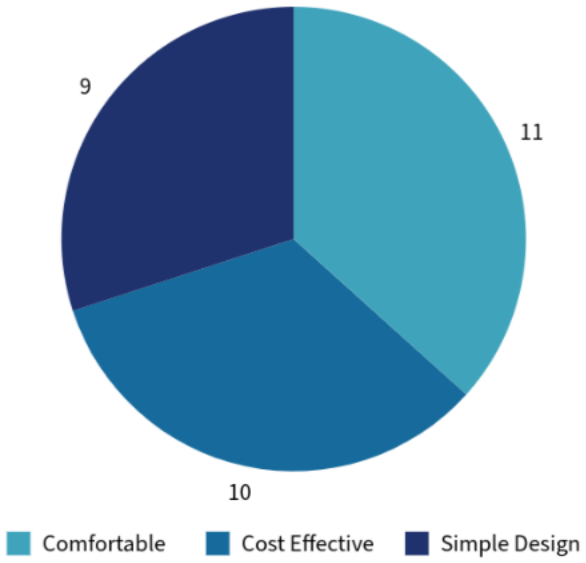

Figure 3: Top Three Customer Needs in a Wearable

With our data, we can see that our customers often worry about their aging parents, but there are few simple, affordable, and comfortable ways to check on their well-being without constant calls. Most current products are either too complex or expensive. Our goal is to create an easy-to-use and affordable solution that allows people to monitor their loved ones' well-being without hassle or high costs.

We feel that our idea has a potential customer base based off of interviews. A lot of our assumptions were validated, with the ones invalidated leading to valuable thinking points.

5. Product Visualization:

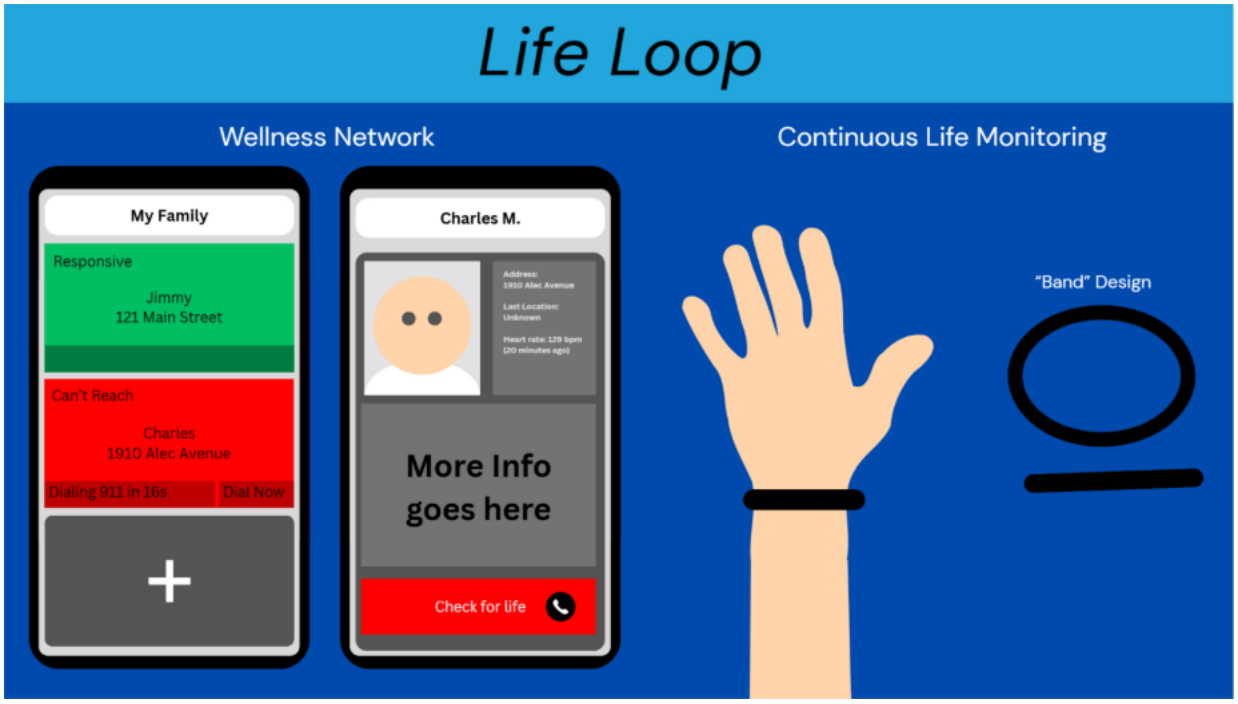

Figure 4: Life Loop Visual

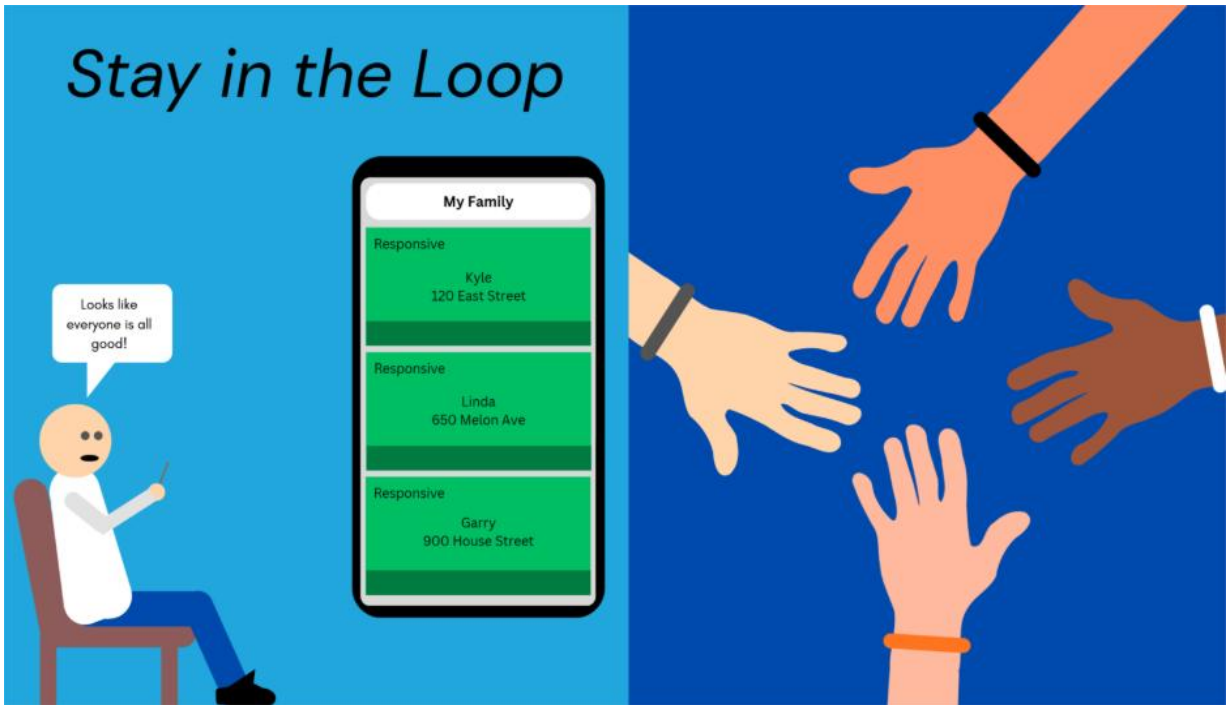

Figure 5: Life Loop "Billboard"

II. Product Specifications/Requirements

Table 1: Product Requirements

Requirement ID	Requirement Description	Category	Criticality
REQ-FUNC-01	The device shall detect falls using the accelerometer with 98 percent accuracy.	Functional	Must Have
REQ-FUNC-02	The device shall upload wearer's heart rate using the heart rate sensor every 2 minutes to the cloud.	Functional	Must Have
REQ-FUNC-03	The device shall upload the wearer's location using the GPS sensor every 2 minutes to the cloud.	Functional	Must Have
REQ-FUNC-04	The device shall utilize BLE for short range (20 ft) communications with the user's phone for data transfer.	Functional	Must Have
REQ-FUNC-05	The device shall utilize Wi-Fi for data transfer if it cannot establish a BLE connection within 10 seconds of waking up.	Functional	Must Have
REQ-FUNC-06	Wearable must be IP67 water-resistant to allow users to wear it safely in the shower or bath.	Functional	Nice to have
REQ-FUNC-07	The device shall have a blue LED to indicate normal device operation.	Functional	Must Have

REQ-FUNC-08	The device shall have a red LED to indicate an emergency situation.	Functional	Must Have
REQ-FUNC-09	When the internal battery capacity drops below 15%, the device will automatically send a "Low Battery" push notification to the family network via the Life Loop app.	Functional	Must Have
REQ-PER-01	The device shall operate on battery power for at least 3 hours.	Performance	Must Have
REQ-INTF-01	The device shall have a button to allow the user to clear an emergency.	Fit/ Interface	Must Have
REQ-DEV-01	The Life Loop app shall be developed for the latest versions of Android and iOS	Development	Must Have
REQ-APP-01	The Life Loop app shall allow to cancel emergency services calls using the PIN.	Functional	Must Have
REQ-APP-02	The Life Loop app shall allow family members to view the wearer's data on the app.	Functional	Must Have
REQ-SEC-01	The system shall use AES-256 encryption to encrypt all transmitted health and location data.	Security	Must Have

III. System Architecture

1. Main System Block Diagrams:

Main Architecture Diagram:

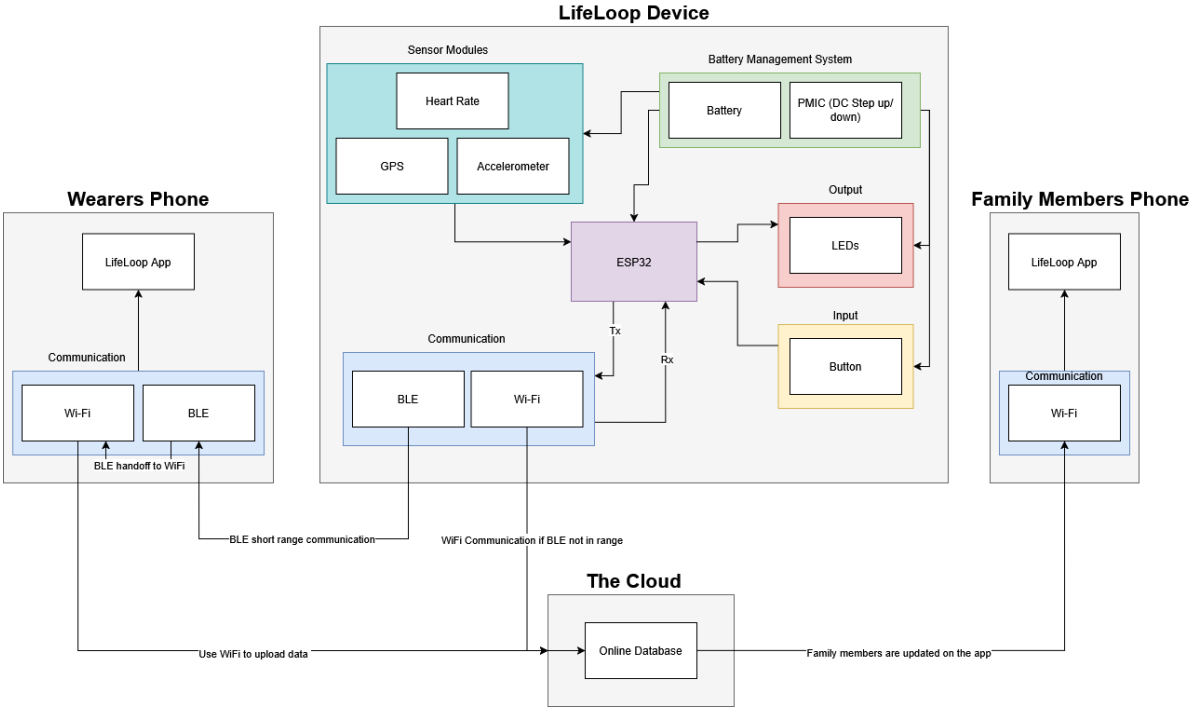

Figure 6: Main Architecture Diagram

This is the overall structure of our device. It is comprised of all the following subsystems: Sensors, Battery Management, Output, Input, Communication, and App.

On-Device Software Block Diagram:

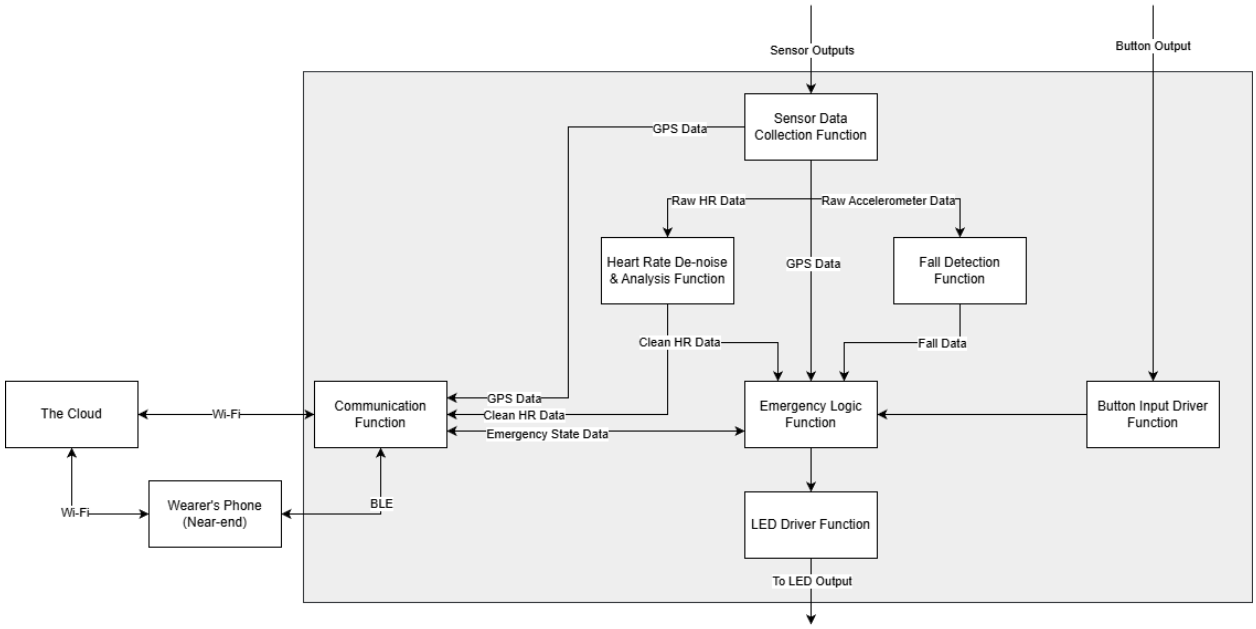

Figure 7: On-Device Software Block Diagram

The Software block diagram shows the main layout of the on-device functions. It starts with our data collection function that receives our sensors data. The heart rate data is sent to the de-noise and analysis function for accurate reading, while the accelerometer data is sent to a fall detection function that processes the data to see if a fall has happened. The GPS data will not need to be processed. The most important function is the Emergency Logic function which will take all of the clean inputs and check them for anomalies (irregular HR, falls, no-go GPS locations, etc.). This will culminate in a decision to enter an emergency scenario. This signal, along with the GPS and HR data will be sent to the cloud.

2. Subsystem Diagrams:

Battery Management System Block Diagram:

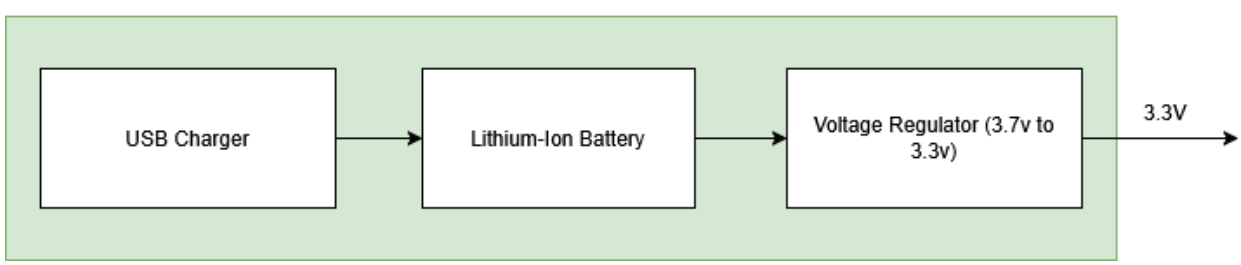

Figure 8: Battery Management System Diagram

The battery management system will allow users to charge the lithium-ion battery using a standard USB interface. This battery will power the entire system using a voltage regulator to convert the 3.7v output to a standard 3.3v for all components.

Sensor Module Block Diagram:

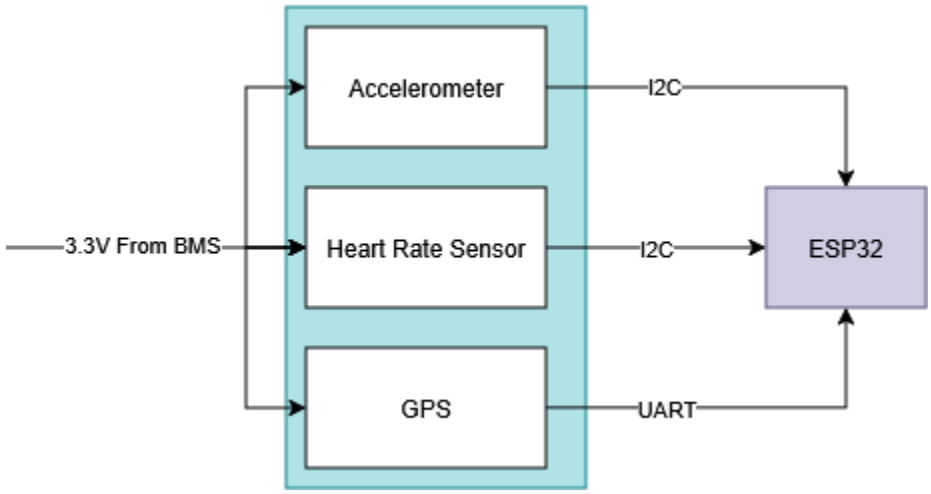

Figure 9: Sensor Module Diagram

The sensor module of the device includes all three main sensors we will use: Accelerometer, heart rate, and GPS. The accelerometer and heart rate sensor will use I2C, and the GPS sensor will use UART to communicate with the ESP32.

Input and Output Block Diagram:

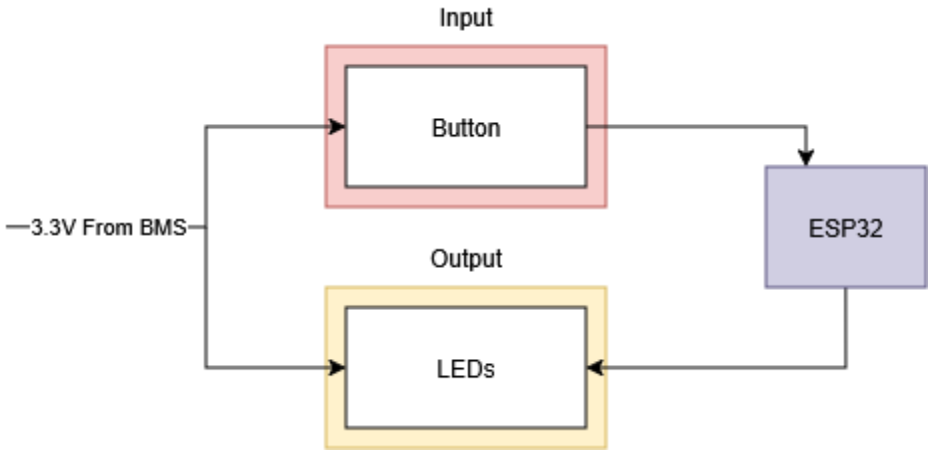

Figure 10: Input and Output Diagram

The Input and output block diagram show all the input and output devices we will use. For input, we plan to use a button for simple operations the wearer

might need to do. For the output, we plan to use a blue and red LED to indicate regular and emergency situations respectively.

Communication Module Block Diagram:

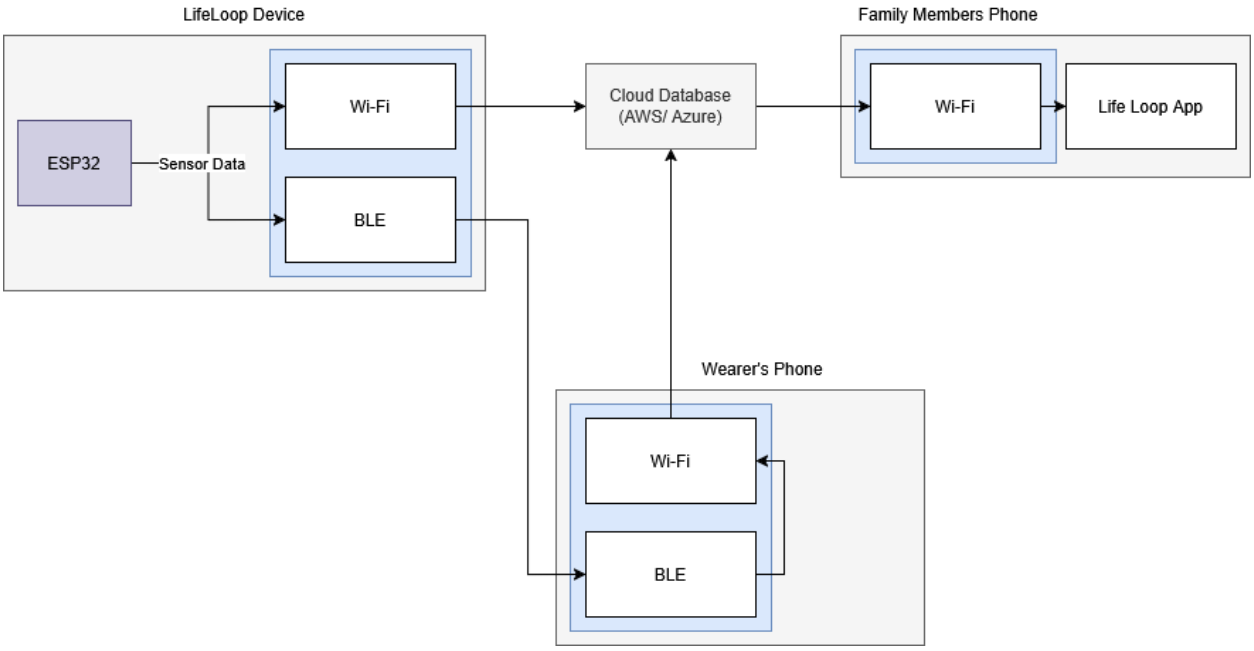

Figure 11: Communication Diagram

The Communication diagram shows how we plan to implement the way our device will share its data. As seen in the main architecture diagram, the device will try to use BLE if the wearer's phone is nearby to piggyback off that device's Wi-Fi. If BLE connection cannot be established the device shall use Wi-Fi to send the data to our cloud system.

App Diagram:

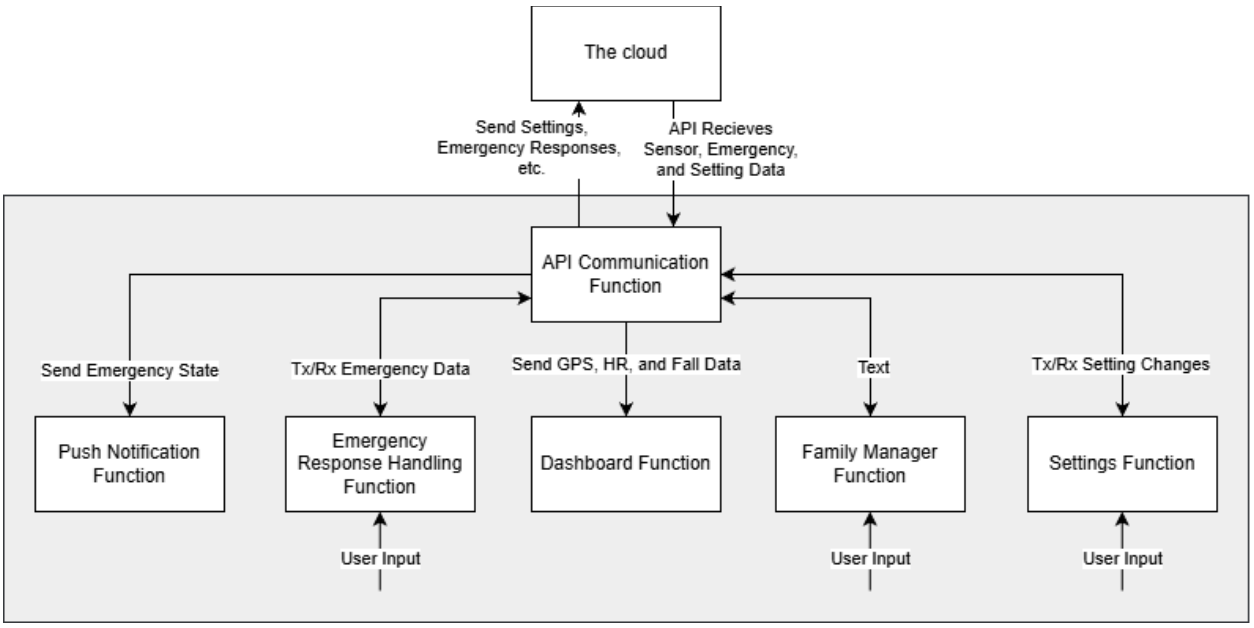

Figure 12: Life Loop App Diagram

This is the App Diagram for the Life Loop App. The app will feature an API function that is used as the tunnel in and out of the application and interfaces with a server API. This API will house all of the data needed for the Application to function. The app will have five main functions, those being Push Notification, Emergency Response Handling, Dashboard, Family Manager, and the Settings functions.

3. Use Case Analysis

<u>Use Case 1: Passive Daily Peace of Mind (Checking on someone using the app):</u>

Jimmy (age 40) hasn't spoken to this older brother Charlie (age 62) all day. Instead of calling and potentially interrupting him, jimmy opens the Life Loop app. Jimmy sees Charlie's status as "Responsive" (Green) at his home address. Jimmy now has peace of mind that his older brother is all good.

Actors: Jimmy, Charlie, Jimmy's phone, Charlie's Life Loop device, Life Loop app

Goal: Jimmy is trying to check on Charlie's wellness and location

Flow: Pre-conditions:

- Charlie's Life Loop is being worn
- There is internet access for all devices

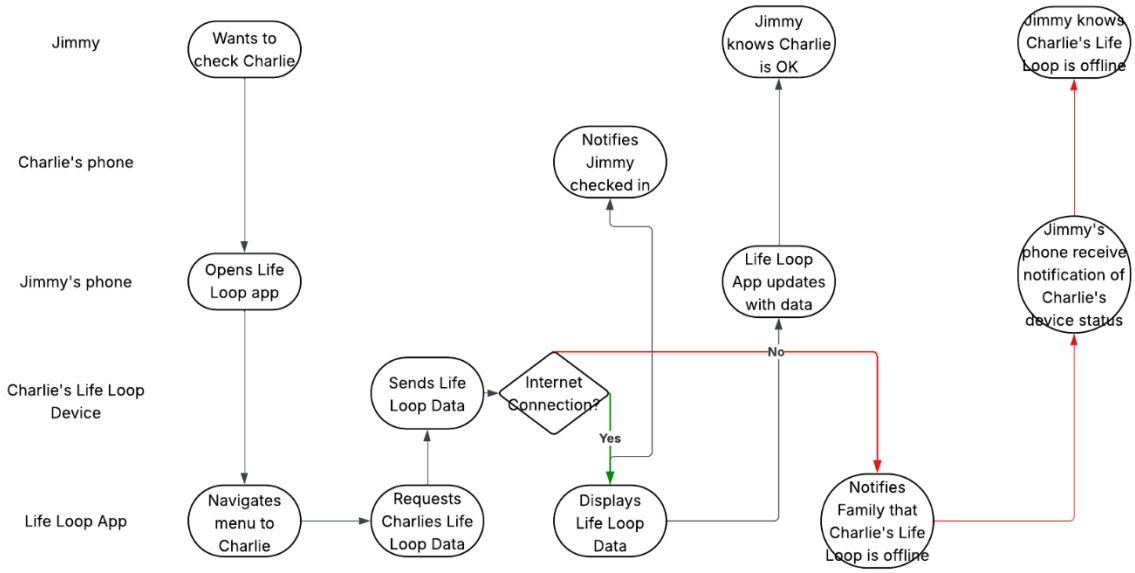

Figure 13: Use Case 1 Swimlane Diagram

Alternative/exception flow: The exception flow, highlighted in red, shows a scenario where Charlie's Life Loop does not have an internet connection and therefore his status cannot be displayed to Jimmy. The app would notify Jimmy that Charlie's device is offline.

Outcome: Jimmy successfully sees Charlie's status as "Responsive" and his location

<u>Use Case 2: Critical Emergency (Automated Escalation)</u>

Belinda (age 85) has been equipped with a Life Loop by her son Noah (age 50) because she lives alone. Belinda experiences a sudden fall while at home. The Life Loop wearable immediately detects the impact via the accelerometer or abnormal pulse from the heart rate sensor. Life Loop bypasses the need for a button press and instantly updates her status as "Unresponsive" (Red) and a high priority push notification is sent to Noah. The system initiates a countdown to call EMS.

Actors: Belinda, Noah, Belinda's Life Loop device, Life Loop App

Goal: Belinda will be safe due to the device alerting her son and EMS of her unresponsiveness.

Flow: Pre-Conditions:

- Belinda's Life Loop is being worn
- Belinda is unresponsive
- All devices have internet access
- Noah has installed the Life Loop app and has notifications on

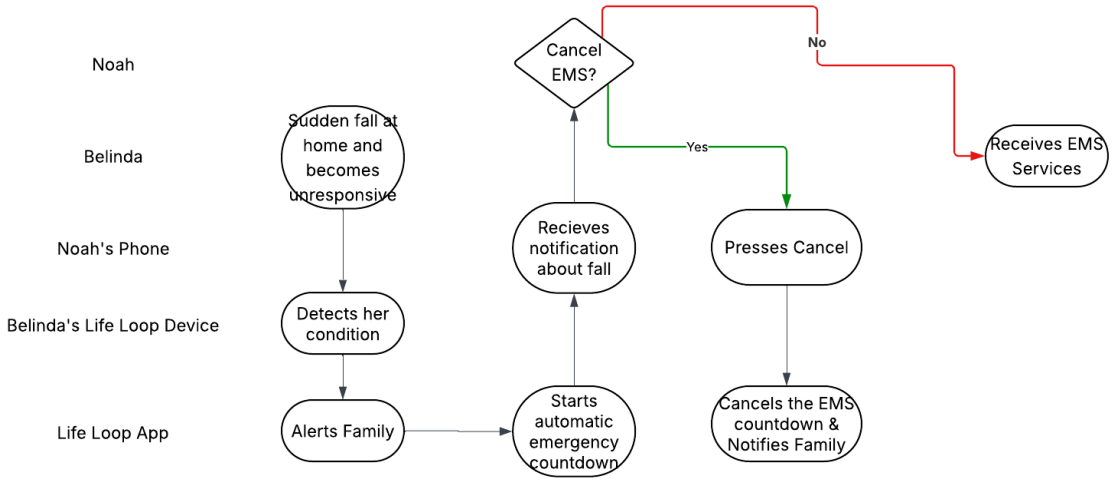

Figure 14: Use Case 2 Swimlane Diagram

Alternative / exception flow: Noah receives the notification regarding the status of Belinda and decides to skip the countdown so he can call EMS himself.

Outcome: Noah is alerted of the situation, and EMS will be alerted after some time.

<u>Use Case 3: Minor Incident, False Alarm Prevention</u>

Walter (age 68) experiences a low-impact slip-and-fall incident that leaves him fully conscious and uninjured. The Life Loop's accelerometer immediately detects abnormal deceleration. Without requiring any initial input from Walter, the system updates his status to "Unresponsive" (Red) on the family dashboard, initiates the automated EMS dispatch countdown, and sends a high-priority alert to his son, Floyd (age 19). Recognizing that the device has triggered a false alarm, Walter presses the physical override button on his Life Loop wearable. This action instantly aborts the EMS countdown and broadcasts a resolution notification to the shared family network, confirming his safety and preventing the unnecessary deployment of emergency medical services.

Actors: Walter, Floyd, Walter's Life Loop device, Life Loop app

Goal: Prevent EMS and stress among the family due to false alarms.

Flow: Pre-Conditions:

- Walter is wearing his Life Loop device
- Walter fell but is still conscious
- All devices have internet access
- Floyd has the Life Loop app installed

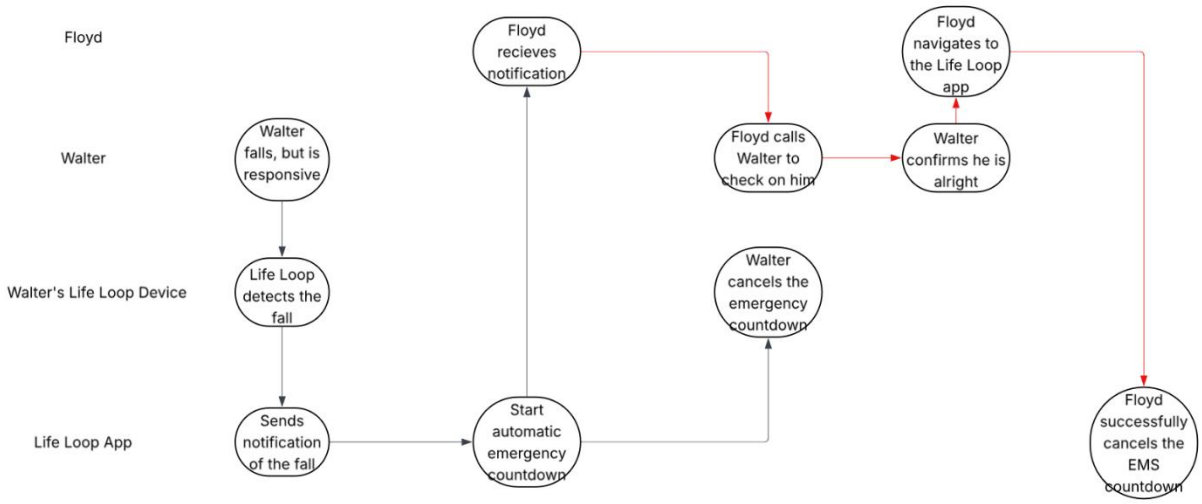

Figure 15: Use Case 3 Swimlane Diagram

Alternative / exception flow: Floyd is notified about Walter's fall, however, does not cancel. Floyd then confirms that Walter is okay and cancels the EMS services. In the swim lane diagram, the exception path is red, and Walter never cancels the emergency countdown.

Outcome: Floyd is notified of the cancellation, and EMS services are cancelled by Walter.

4. Preliminary Bill of Materials (BOM):

Table 2: Bill of Materials

Component	Part Number & Link	Quantity	Unit Price	Total Price
ESP32	ESP-WROOM-32	1	$9.99	$9.99
Heart Rate Sensor	MAX30102	2	$6.50	$12.99

Accelerometer	MPU 6050	3	$3.93	$11.79
GPS Module	GT-U7 GPS Module	2	$5.50	$10.99
Lithium-Ion Battery	602530 500mAh Battery	1	$7.79	$7.79
Red LED	151051RS11000 Red LED	1	$0.15	$0.15
Blue LED	151051BS04000 Blue LED	1	$0.24	$0.24
Lithium-Ion Battery USB C Charger PMIC	Bq25185 USB C Buck Board	1	$8.95	$8.95
Button	TL1100EF160Q Tactile Button	1	$0.49	$0.49
			Total Costs	$63.38

IV. Subsystem Design Specifications

1. Sensor Subsystem

- Purpose: Continuously monitor the wearer's location, and their wellbeing
- Key Functions: Detect falls with the accelerometer, monitor the wearer's heart rate for any irregularities, and track their location utilizing the GPS.
- Inputs and Outputs: Physical motion, heart rate, and GPS signals. The GPS output will use UART, while physical motion and heart rate will use I2C.
- Key Components: Accelerometer, Heart Rate Sensor, GPS, ESP32
- Interfaces: Communicates with ESP32 utilizing the I2C and UART protocols.
- Subsystem-Specific Requirements: To provide reliable local communication between the sensors and the ESP32 without consuming too much power, the I2C bus must run at a standard clock speed of 100 kHz.

2. **Battery Management Subsystem**

   - Purpose: Supply and regulate power to the device
   - Key Functions: Charge the device using a USB-C cable and regulate the voltage of the system.
   - Inputs and Outputs: Power incoming from the USB-C cable. Outputs a stable 3.3V.
   - Key Components: USB-C charger interface, 500 mAh Lithium-ion battery, Voltage Regulator (3.7v to 3.3v).
   - Subsystem-Specific Requirements: The 3.7V battery voltage must be safely stepped down by the PMIC to a very stable 3.3V rail with a ripple voltage of less than 50mV.

3. **Communication Subsystem**

   - Purpose: Relay sensor information to AWS/Azure cloud and connect to the wearer's phone.
   - Inputs and Outputs: Both Tx and Rx signals from the ESP32.
   - Key Components: Wi-Fi module, BLE module
   - Interfaces: Wi-Fi for long range communications, BLE will be utilized for short range communications with the wearer's phone.
   - Subsystem-Specific Requirements: To preserve battery life, the BLE module must be configured to go into a low-power sleep state when not actively transmitting data.

4. **Input and Output**

   - Purpose: Allows for simple physical operation for the device's wearer and displays status with LEDs.
   - Key Functions: Wearer can cancel a false alarm if not seriously injured, and device can indicate statuses.
   - Key Components: Push button, Blue LED, Red LED.
   - Subsystem-Specific Requirements: To keep the current consumption per LED under 20mA, current-limiting resistors must be incorporated into the LED drivers.

5. **Device Enclosure Subsystem**

   - Purpose: While staying comfortable, shield the internal electronics from the environment and physical impact.
   - Key Functions: Provide IP67 water resistance and securely store the wristband attachments and hardware.

- Inputs and Outputs: N/A (serves as actual dwelling).
- Key Components: 3D printed or silicone casing, button, and wristband.
- Subsystem-Specific Requirements: The ESP32's BLE and Wi-Fi radio signals cannot be obstructed or weakened by the case materials.

V. Relevant Engineering Standards

Table 3: Engineering Standards

Standard Name	Category	Purpose / Description	How It Applies to the Project
IEEE 801.11 Wi-Fi	Communication & Networking	Wireless network protocol that enables devices to interface with local networks and cloud infrastructure.	The device will utilize Wi-Fi for long range communication and to send sensor data to the cloud.
I2C Protocol	Embedded Systems & Hardware	Synchronous serial communication protocol that uses a shared clock to allow peripherals to communicate with microcontrollers.	The heart rate and accelerometer sensors will use the I2C protocol to communicate with the ESP32.
UART Protocol	Embedded Systems & Hardware	Hardware communication interface that allows devices to exchange serial data asynchronously across peripherals and microcontrollers.	The GPS sensor will use the UART protocol to communicate with the ESP32.

Bluetooth Low Energy (BLE)	Communication & Networking	Wireless technology focused on minimized power consumption, designed for a short range of communication.	The device shall utilize BLE for short range communications with the user's phone.
Universal Serial Bus (USB)	Embedded Systems & Hardware	A standardized technology that allows for connecting, communicating, and powering computers and electronic devices.	The battery management system will allow the wearers to charge the lithium-ion battery using the USB interface.
Advanced Encryption Standard (AES-256)	Software & Data Security	Security protocols or methods that can translate data into a code, or ciphertext to secure sensitive data during the transmission.	The system shall encrypt all transmitted health and location data to maintain security and user privacy.

VI. Realistic Constraints and Design Impact

Table 4: Realistic Constraints & Design Impacts

Constraint Type	Description	Impact on Design Decision	Trade-off Made
Wearability & Comfort (Physical)	Must be comfortable, subtle, and accessible for daily use.	We chose a simple "band" design. It must be unobtrusive enough to share "wrist space" and avoid the social stigma of traditional medical wear	Life Loop will not have physical space for large screens or numerous buttons, limiting user interactability
Cost-Effectiveness (Economic)	Must be affordable, avoiding the high upfront and monthly costs of existing premium systems	We avoid high upfront equipment costs	We lose premium hardware aesthetics and expensive cellular/monitoring overhead to maintain a low cost of entry
Battery Life (Power)	Device must hold a charge long enough to be reliable in an emergency	We eliminated complex screens and power-hungry applications. We chose to rely solely on essential passive sensors like	We give up active, power-hungry applications and complex screen navigation to extend the device's operational time.

Response Accuracy (Functional)	The system must detect both hard and "soft" falls while preventing false positives	We designed a tiered escalation protocol to prevent unnecessary ambulance dispatch. The device alerts the family network first, only contacting 911 if there is no response.	We give up a completely hands off experience for a moment of user interaction

Bibliography

1. Grand View Research. "U.S. Wearable Medical Devices Market (2024-2030)." Retrieved March 16, 2026, from https://www.grandviewresearch.com/industry-analysis/us-wearable-medical-devices-market-report