CEGE0024

Structures and Materials: Plastic Analysis and Finite Element Modelling

Dr. Leo de Waal
l.waal@ucl.ac.uk

Eighth session objectives

- Modelling with 1D elements
- Sub-modelling boundary conditions

Select all correct statements. Under which conditions is it appropriate to model a structural member using **1D beam or truss elements**?

a) One dimension of the structure is much larger than the others (slender geometry)

b) The cross-sectional behaviour can be represented using section properties (A, I, J)

c) The primary interest is global stiffness, deflection, or internal force

d) Local 3D stress concentrations (e.g. near holes or contacts) are critical

e) The member carries only axial force

f) The exact through-thickness stress distribution is required

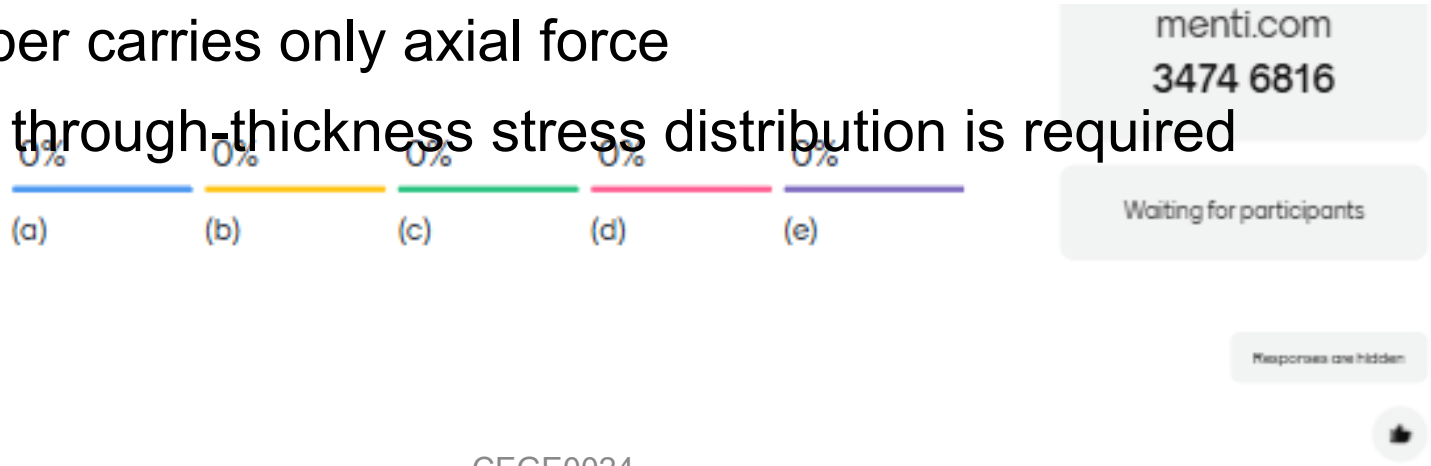

Connections

Pin connections: Transfers axial but no moment

(a) Typical clevis connection

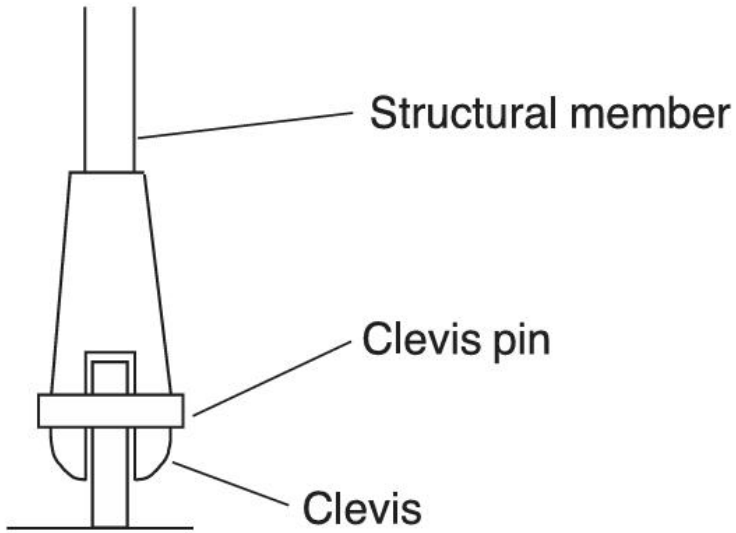

(b) Section showing clevis pin

[1] MacLeod, I. A. (2005)

Connections

Moment connection

- Full continuity between members
- The connection is able to transfer moments

[1] MacLeod, I. A. (2005)

Connections

What type of connection is this?

[1] MacLeod, I. A. (2005)

Connections

Semi-rigid connection

- In reality, connections usually fall somewhere between pinned and completed moment transfer.

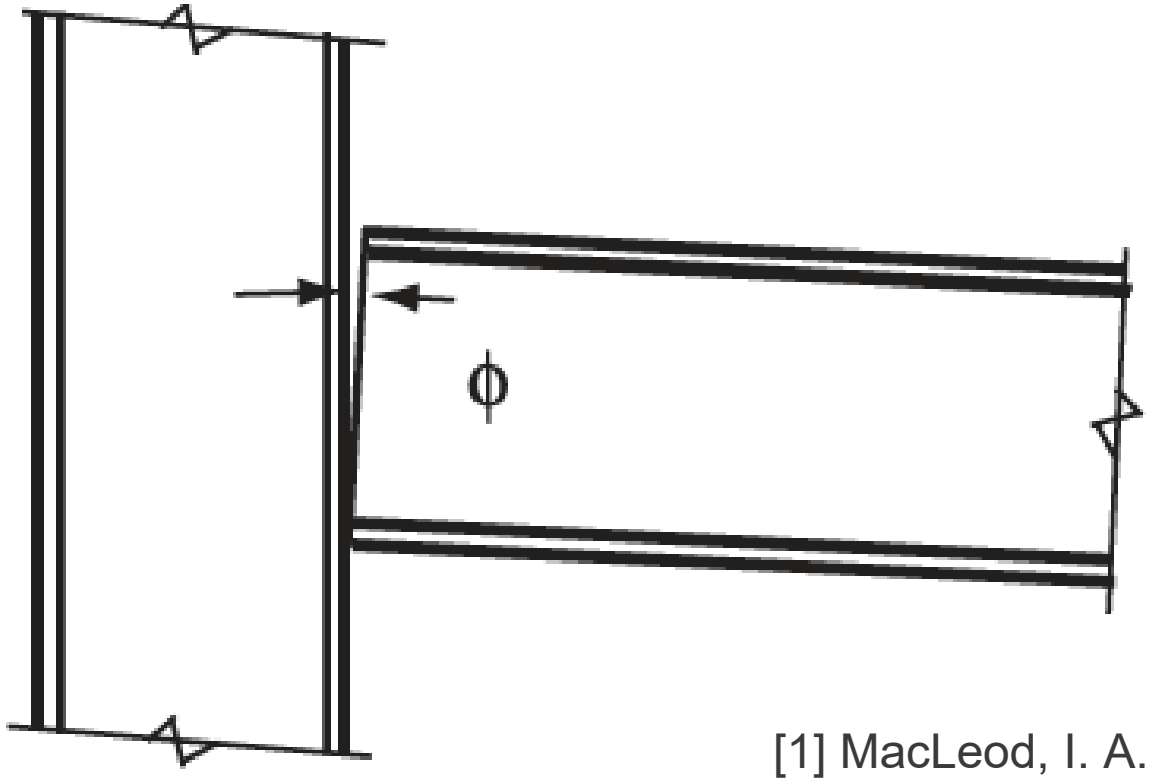

[1] MacLeod, I. A. (2005)

Connection

Treatment of finite depth of beams

- Sometimes it is necessary to take account of the finite depth of the beam to model more accurately the effect of the connection or a support.

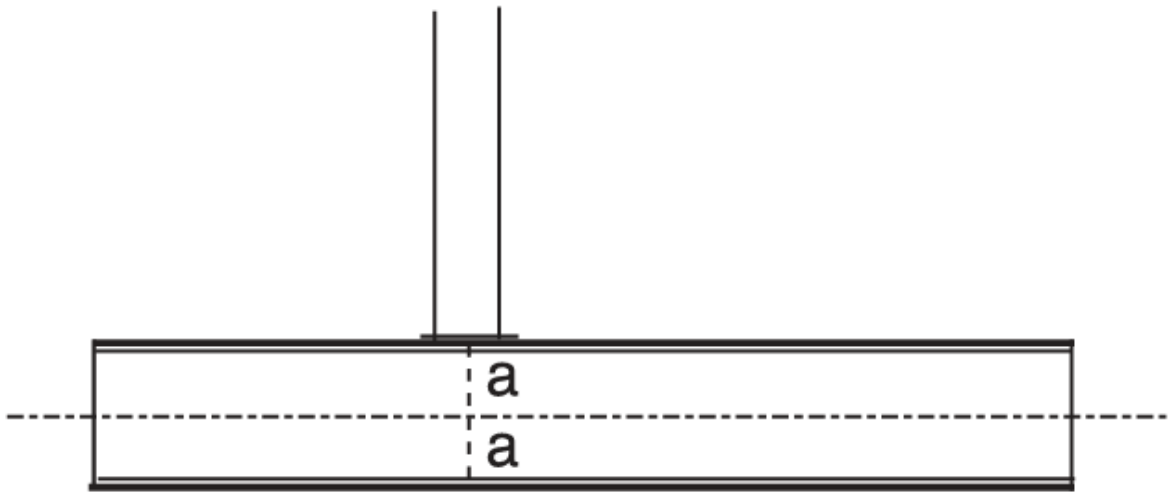

(a) Beam supporting a column

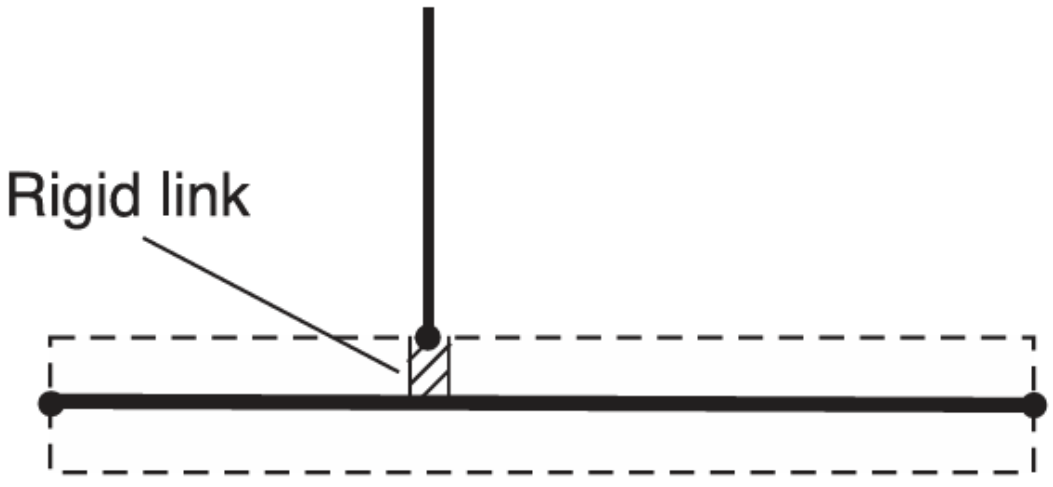

(b) Beam element model with rigid link

[1] MacLeod, I. A. (2005)

Connections

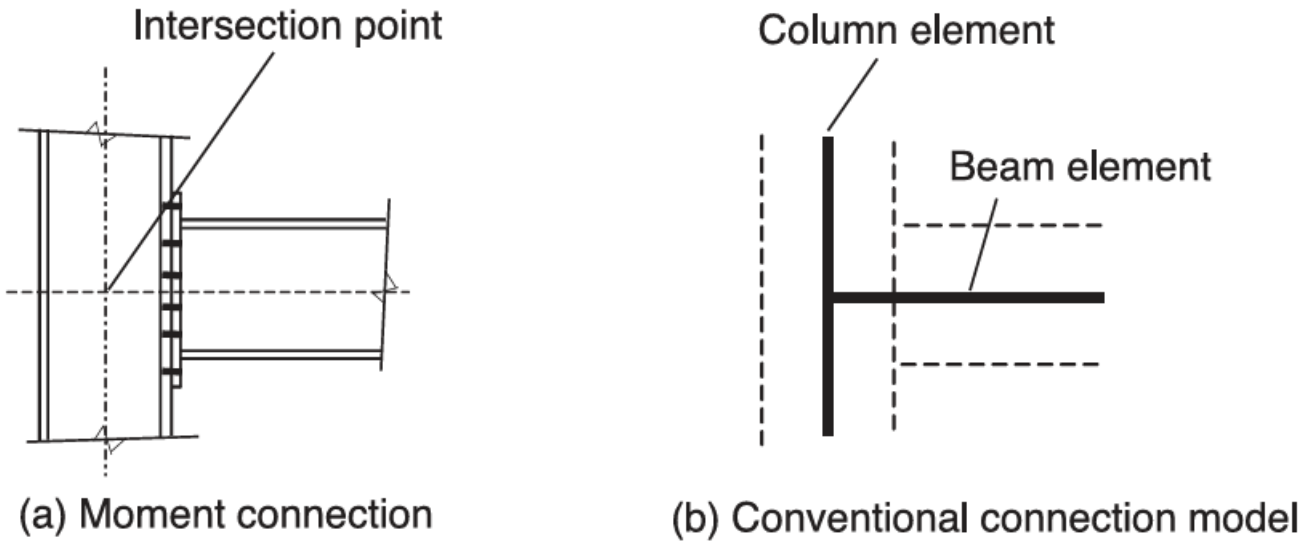

- **Neglecting the effect of the finite sizes** of the members will tend to **underestimate the stiffness of the connection**.
- It would be **conservative** to take the design support moment for the beam at the **intersection point**, but it is normal to take it at the **face of the column**

[1] MacLeod, I. A. (2005)

Connections

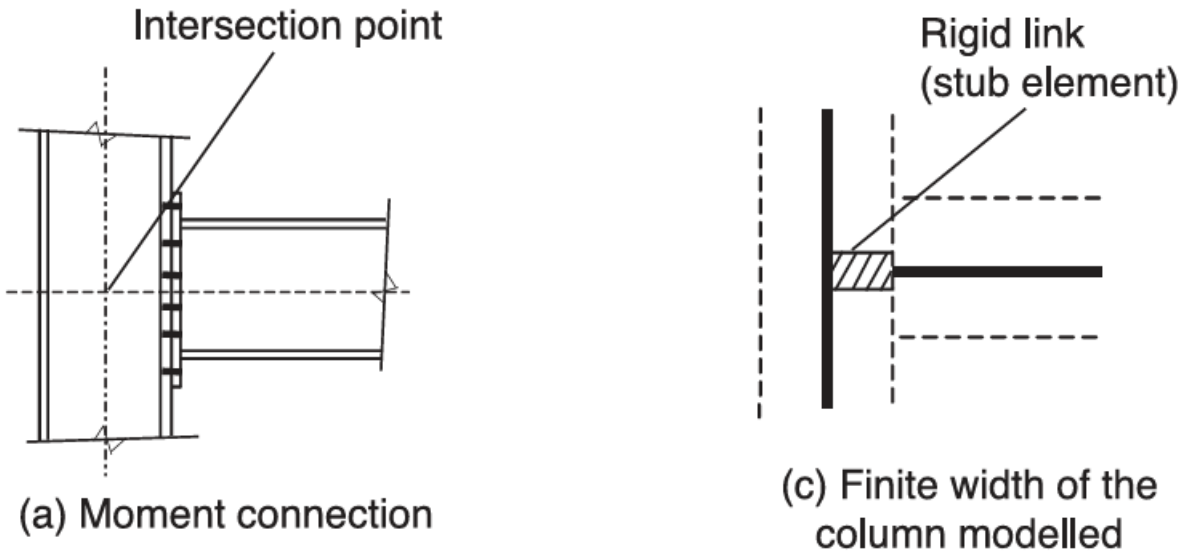

- Finite width of the column can be modelled using a rigid link
- The inclusion of the rigid links will **increase the effective stiffness** of the beam.

[1] MacLeod, I. A. (2005)

Connections

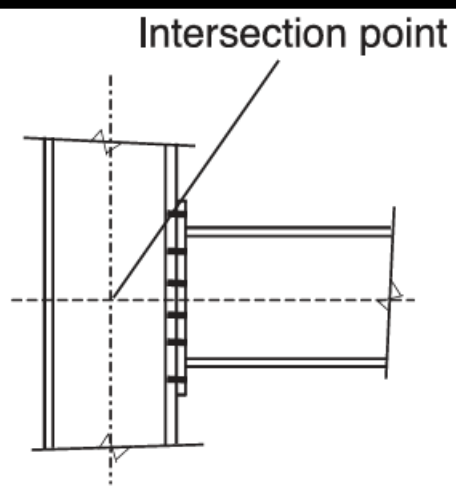

(a) Moment connection

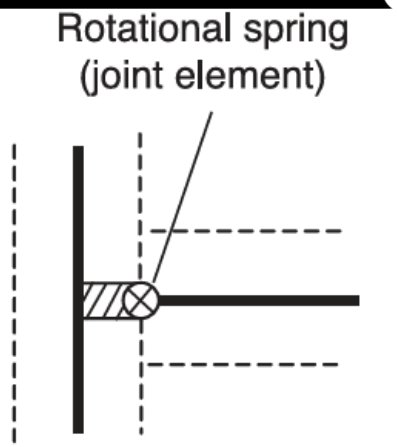

(d) Finite width of the column and joint rotation modelled

- Finite width of the column can be modelled using a rigid link – **increases stiffness**
- A rotational spring between the end of the stub and the beam to take account of the rotational stiffness of the connection - **it reduces the stiffness**
- The **conventional model** may therefore give **reasonable predictions of stiffness** due to **compensating assumptions**.
- Whether or not the rigid links and the rotational springs are important can be assessed using a **sensitivity analysis.**
- Appendix J of Eurocode 3 (CEN 2004b) gives rules for estimating values of the rotational stiffness of steelwork connections.

[1] MacLeod, I. A. (2005)

Connections

- Modelling of pinned connections

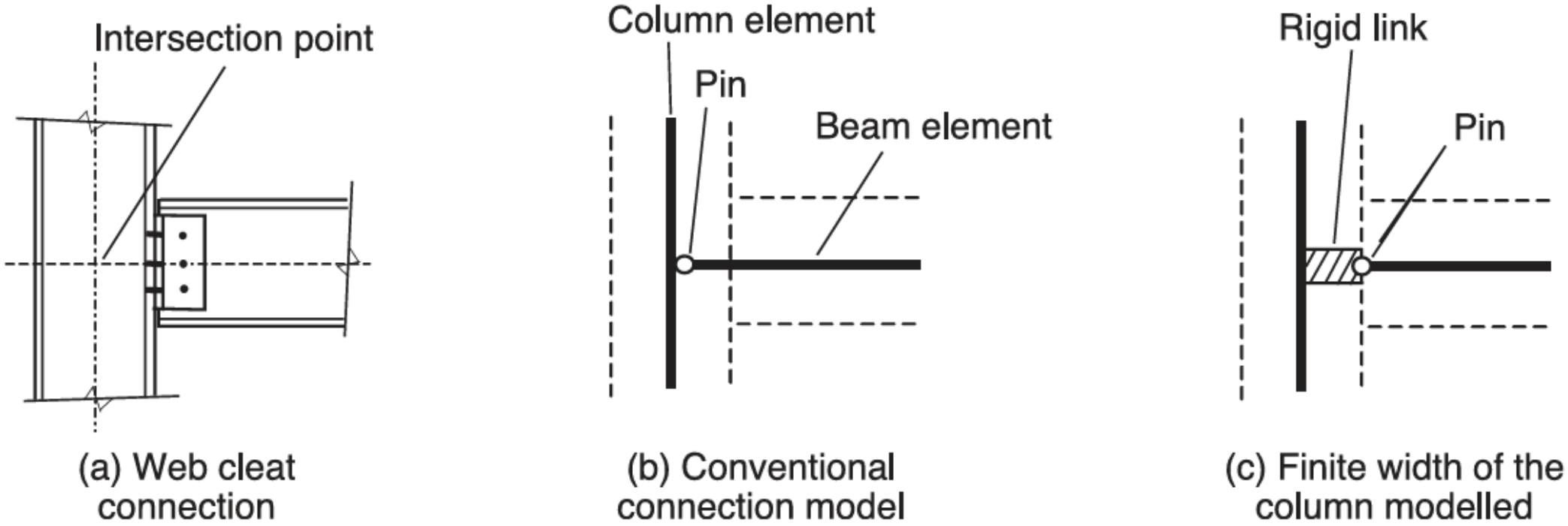

[1] MacLeod, I. A. (2005)

Connections

- At a joint, if *m* members meet at a joint, **only *m*-1 members should be released.** The single unreleased member end provides a rotational stiffness, but since there is no other element with bending stiffness to connect to it, the joint behaves as a pin.

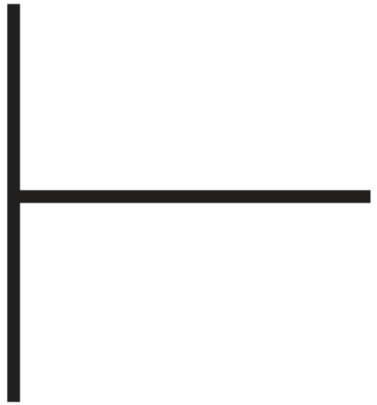

(a) Beam-to-column moment connection

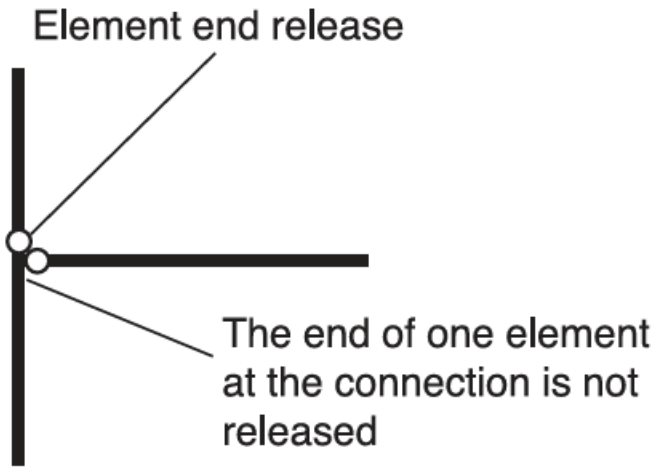

(b) Rotational releases to create a pinned connection

[1] MacLeod, I. A. (2005)

Connections

Eccentricities:

- Ideally deign without them but sometimes it is not possible, in this case you should consider them.

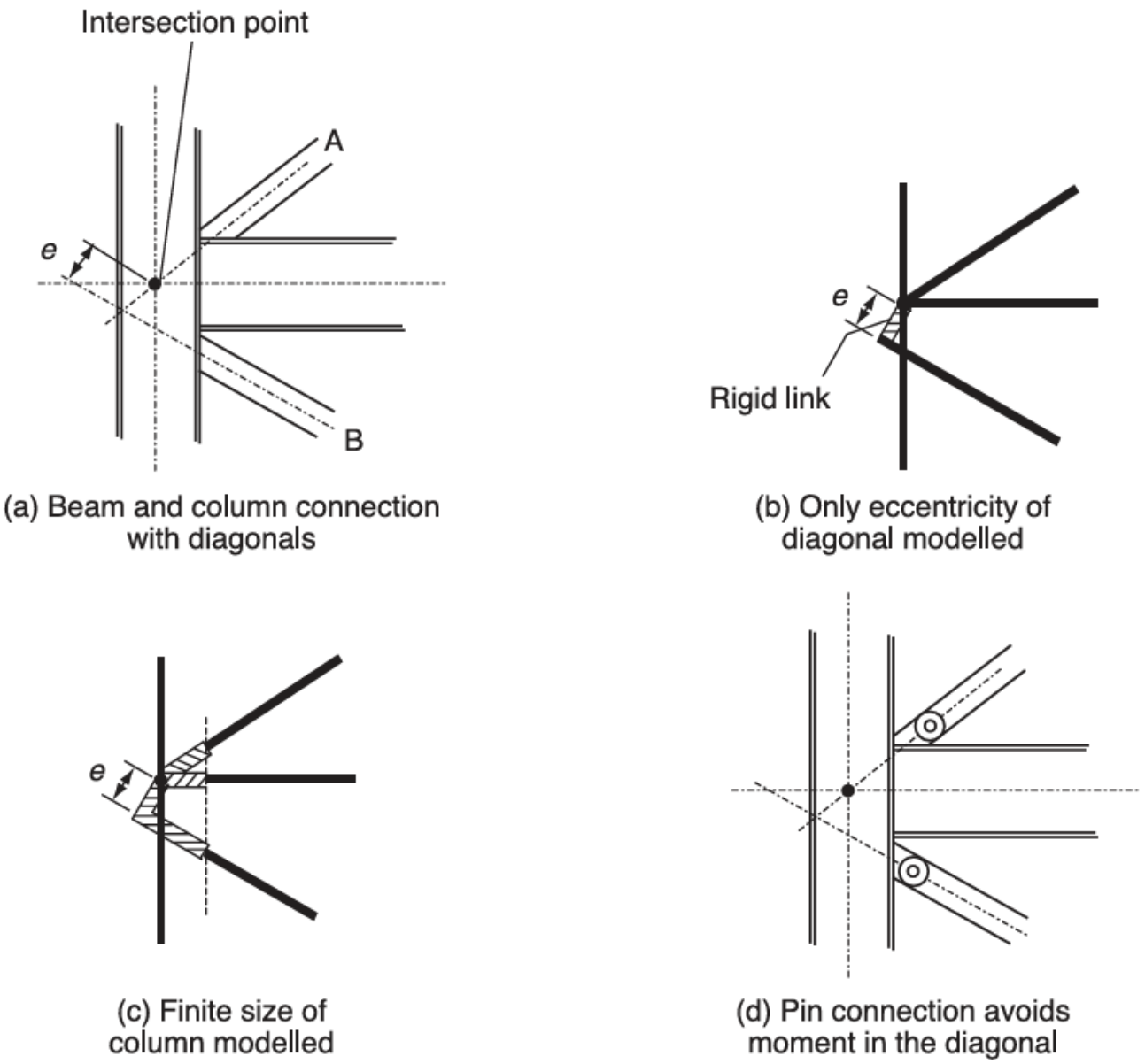

(a) Beam and column connection with diagonals

(b) Only eccentricity of diagonal modelled

(c) Finite size of column modelled

(d) Pin connection avoids moment in the diagonal

[1] MacLeod, I. A. (2005)

Modelling varying thickness

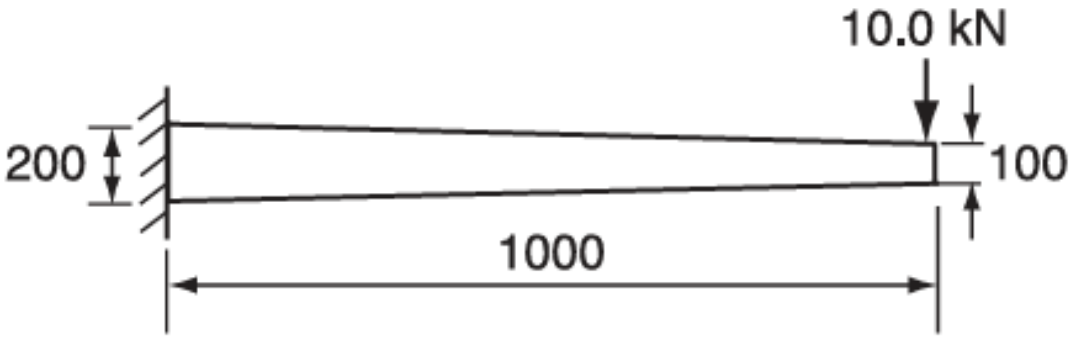

(a) Tapered cantilever

(b) Analysis model showing five two-noded elements

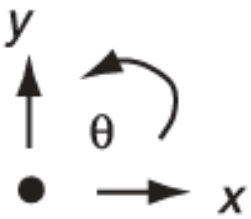

(c) In-plane degrees of freedom

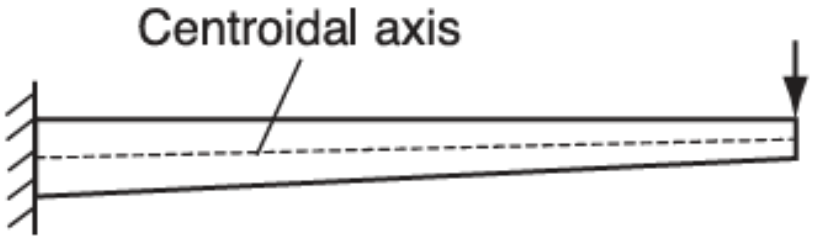

(d) Cantilever with tapered soffit

Dimensions in mm

[1] MacLeod, I. A. (2005)

Questions related to the assignment

Part 2:

<u>6. Boundary Conditions for more detailed analysis (1 x A4 page maximum)</u>

Assuming the rafter splice connection between the tusk rafter and arch rafter is a candidate for more detailed analysis, provide:

- A clear sketch **showing the boundary conditions** you would apply to a **local FE model of this connection**
- A description of the **forces and/or displacements** that would be imposed

You are not required to build the detailed FE model. The focus is on appropriate boundary condition definition.

Recap L6: Modelling principles

[3] Duffour, P (2026)

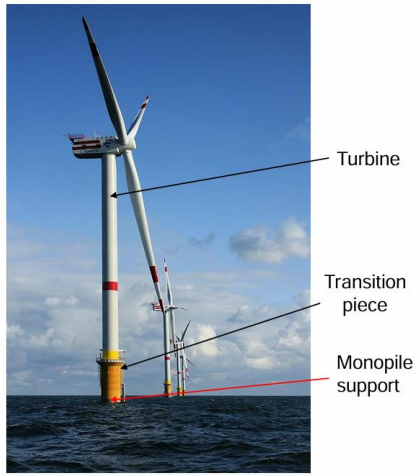

Wire model of the whole system

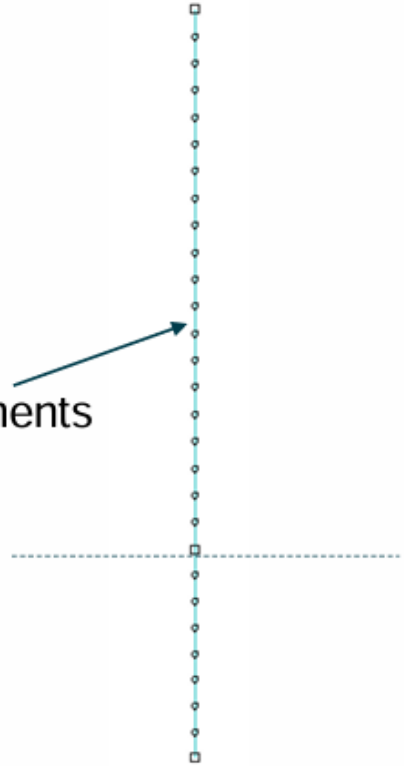

1D elements

Gives overall dynamics behaviour and forces

Shell model of the monopile

2D elements

Used to check local buckling of cylinder

Detailed model of the transition piece

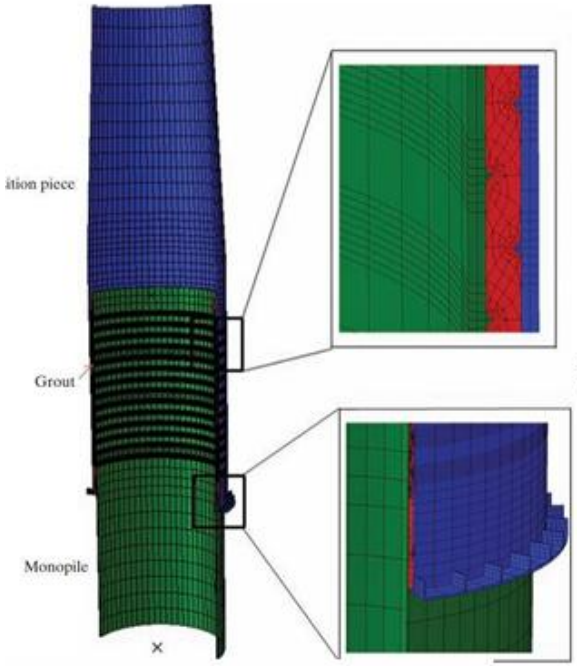

3D elements

Used to size steel details (stiffeners etc)

Recap L7: Mesh refinement

St-Venant principle: The detailed stress distribution near where a load is applied only matters locally. Far away, only the resultant force matter.

- Local stresses: highly dependent on how a load or constraint is applied
- Resultant stresses: govern global response (deformation, stresses)

Recap L7: Mesh refinement

St-Venant's principle: The detailed stress distribution near where a load is applied only matters locally. Far away, only the resultant force matter.

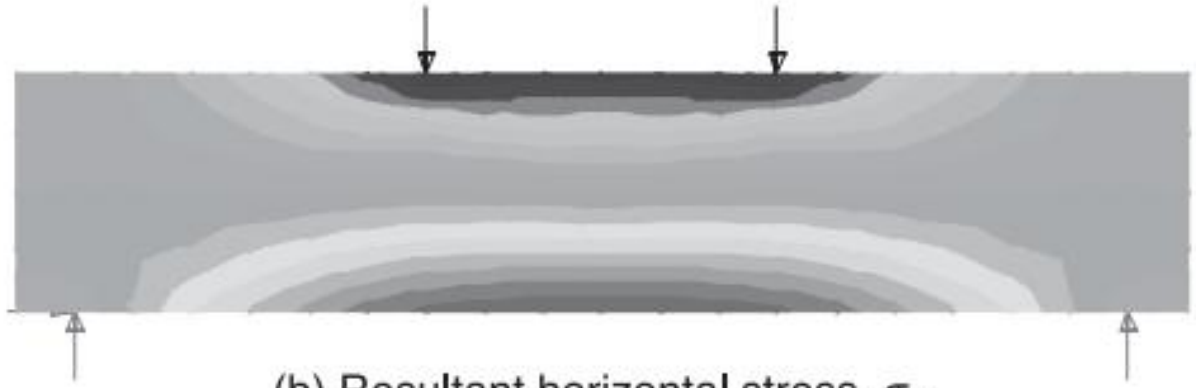

(b) Resultant horizontal stress, σ_x

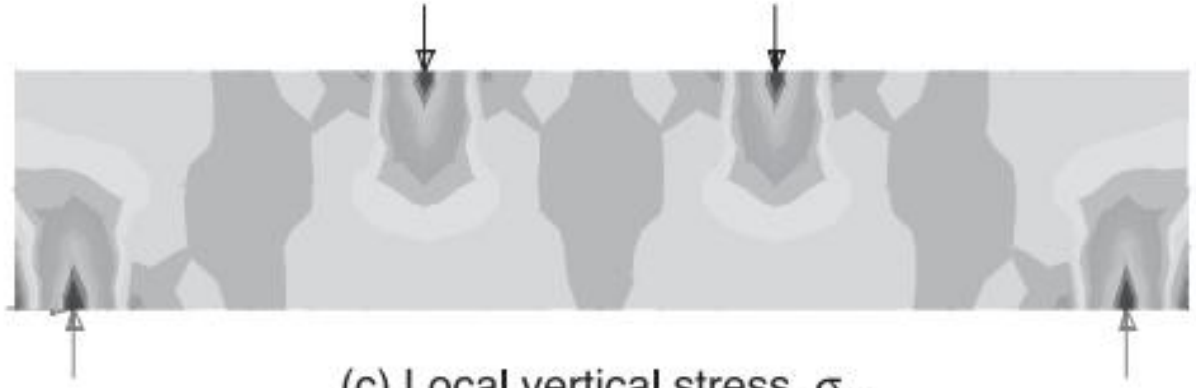

(c) Local vertical stress, σ_y

"The St-Venant principle has the following consequences.

- The effect of local stresses tends to become negligible at distances twice the length over which the stress concentration acts.
- When calculating resultant stresses, the force actions can be replaced by static equivalents. This is not so for local stresses" [1]

[1] MacLeod, I. A. (2005)

How should you apply boundary conditions?

At the interface between global and local models you have two broad ways to “connect” them:

(1) Enforce compatibility (match displacements)

You prescribe the boundary motion (translations/rotations) on the sub-model boundary so it deforms like the global structure at that location. This tends to work well because:

- the global model is usually good at predicting global deformations
- St-Venant’s principle: away from the detailed joint, the solution is governed mainly by the overall deformation state, not exact traction distribution

How should you apply boundary conditions?

At the interface between global and local models you have two broad ways to “connect” them:

(2) Enforce equilibrium (apply forces/tractions)

You apply the section forces/moments from the beam model to the sub-model boundary. This is riskier because:

- the local stiffness of the sub-model is different (shells, bolt rows, plates, contact, etc.). Small changes in stiffness/details can cause big changes in reaction forces and their distribution
- the true traction distribution across the cut is not known from a 1D beam model

Questions related to the assignment

Part 2:

6. Boundary Conditions for more detailed analysis (1 x A4 page maximum)

Assuming the **rafter splice connection** between the **tusk rafter and arch rafter** is a candidate for more detailed analysis, provide:

- A clear sketch **showing the boundary conditions** you would apply to a **local FE model of this connection**
- A description of the **forces and/or displacements** that would be imposed

You are not required to build the detailed FE model. The focus is on appropriate boundary condition definition.

Questions related to the assignment

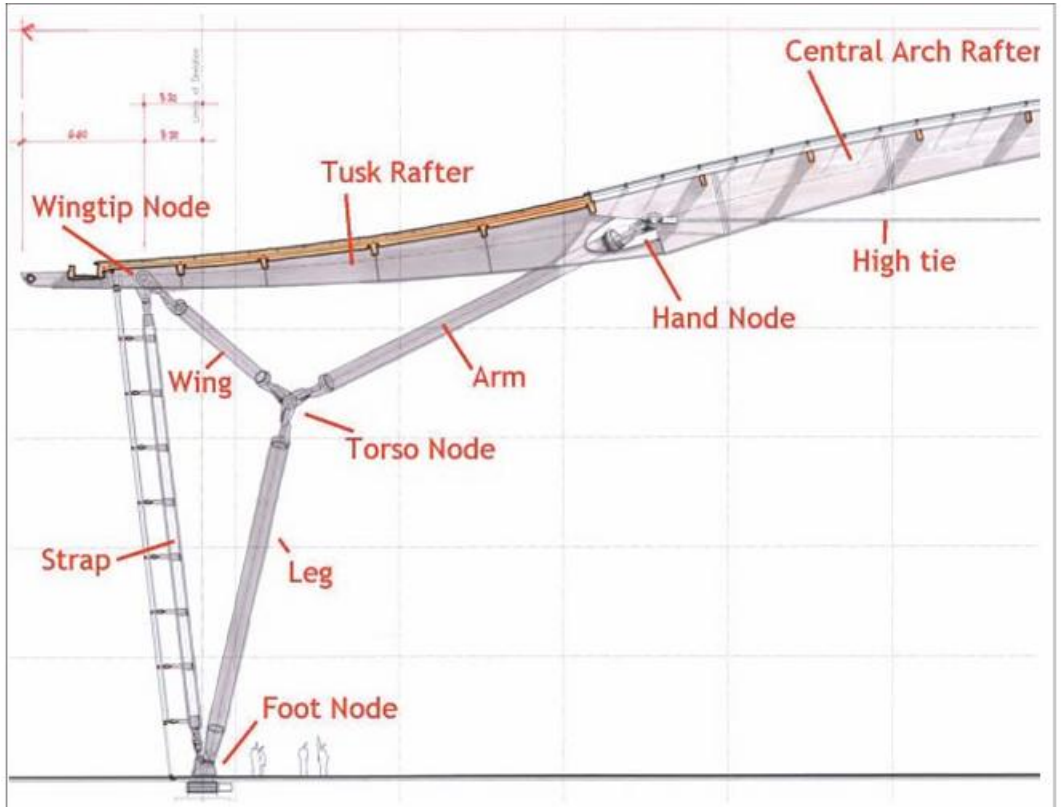

Splice between centre section and abutment

[4] Supplementary material

Questions related to the assignment

- Part 1:

Design requirement: You are required to design the beam such that the solution is **economical** and **practical to construct.**

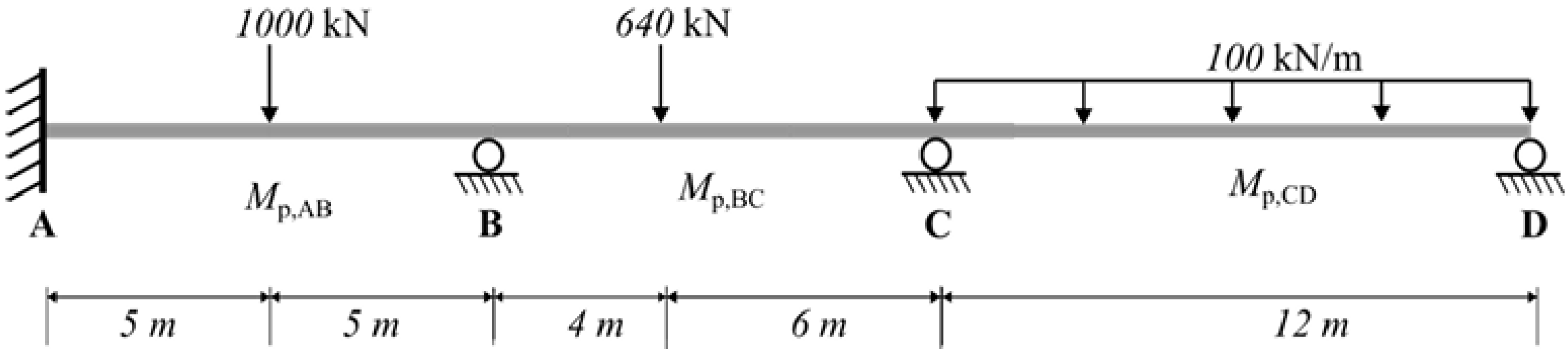

Recap L3 - Multiple spans

- Continuous beams are analysed in a similar way.

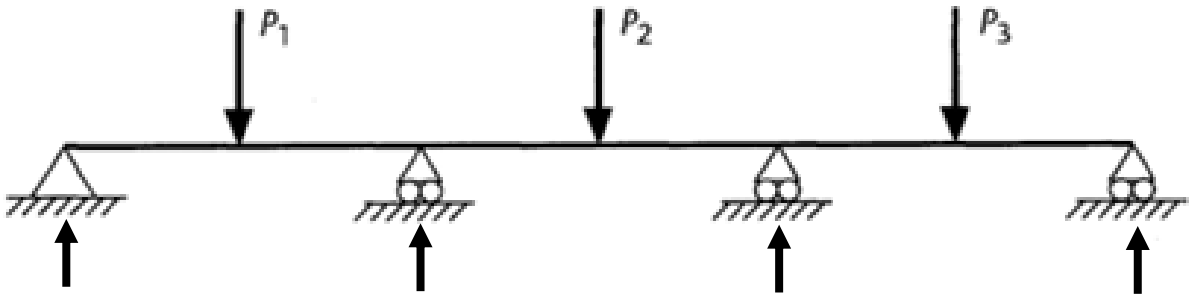

Possible collapse mechanisms:

- Complete collapse: $Actual\ number\ of\ hinges = n$
- Partial collapse: $Actual\ number\ of\ hinges < n$
- Over-Complete collapse: $Actual\ number\ of\ hinges > n$

Number of hinges required for collapse:

$$D = 4 - 2 = 2$$

$$\therefore n = D + 1 = 3\ hinges$$

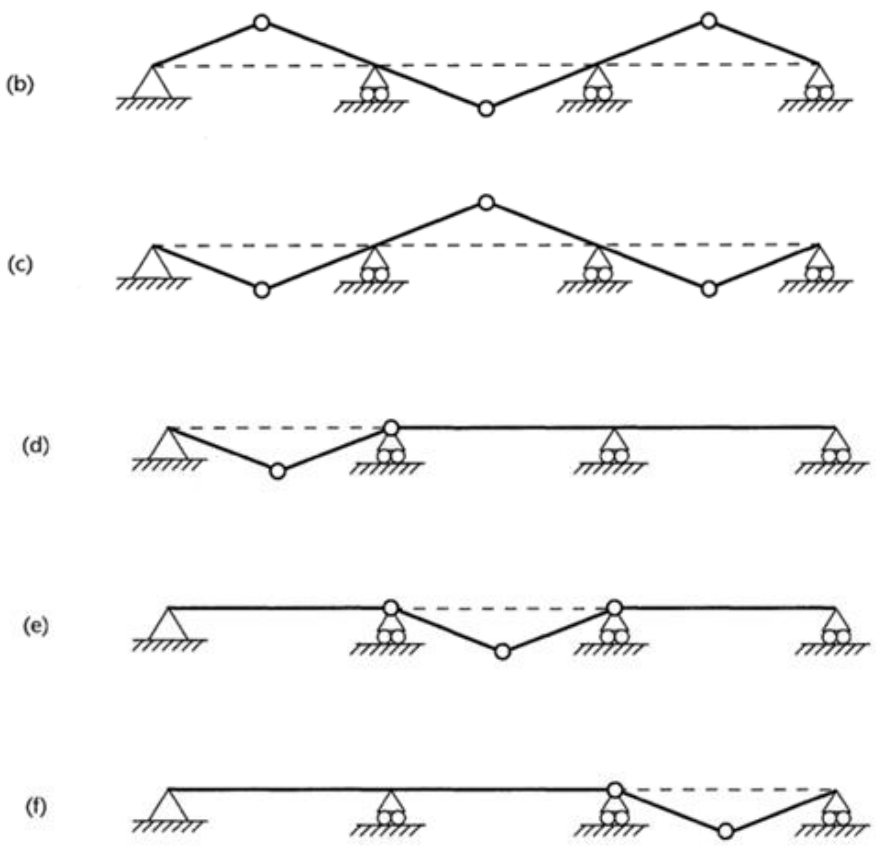

[2] Williams and Todd, 2020

References

[1] MacLeod, I. A. (2005). *Modern structural analysis : modelling process and guidance / Iain A. MacLeod.* Thomas Telford

[2] Williams, M., and J. D. Todd. *Structures: Theory and Analysis*. Macmillan Education UK, 2000.

[3] Duffour, P. Personal communications – CEGE0009 lecture slides, (2026).