Structures Coursework

Group 8

March 26, 2026

Contents

1 Plastic Analysis **2**
- 1.1 Plastic analysis of span BC . . . 2
- 1.2 Plastic analysis of span AB . . . 2
- 1.3 Plastic analysis for span CD . . . 3
- 1.4 Line Sketch and Justification . . . 4

2 Deliverable 1: Structural Idealisation Sketch **5**

3 Deliverable 2: Material, Section, and Loading Data **6**

4 Deliverable 3: Initial Model Validation **7**
- 4.1 Assumptions . . . 7
- 4.2 Model Validation . . . 7
- 4.3 Validated Aspects . . . 7

5 Deliverable 4: Mesh Refinement Sensitivity Study **8**
- 5.1 Convergence Study Methodology . . . 8

6 Deliverable 5: Influence of Prestressing Assumptions **9**
- 6.1 Discussion of Results . . . 9
- 6.2 Implications for Design and Tolerance . . . 9

7 Deliverable 6: Boundary Conditions for More Detailed Analysis **10**

1 Plastic Analysis

The beam is assessed by the virtual-work method. Span BC is solved first so that the support hinge moment at B and C can then be carried into spans AB and CD. The assumed plastic hinge sets are A-midspan-B for span AB, B-load point-C for span BC, and C-interior hinge for span CD.

1.1 Plastic analysis of span BC

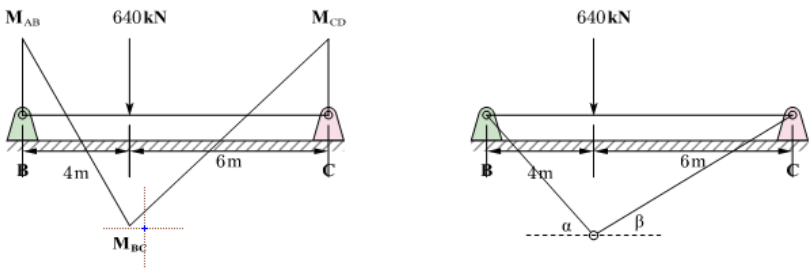

Figure 1: Collapse mechanism adopted for span BC.

Take plastic hinges at B, at the 640 kN load point, and at C. Let the required plastic moment for this span be $M_{p,BC}$. The span length is $BC = 10\,\text{m}$, with the load acting 4 m from B and 6 m from C.

Compatibility gives

$$4\theta_B = 6\theta_C \qquad \Rightarrow \qquad \theta_C = \frac{2}{3}\theta_B \qquad \text{and} \qquad \delta = 4\theta_B$$

The external work is

$$W_e = 640(4\theta_B) = 2560\theta_B$$

The internal work is

$$\begin{aligned} W_i &= M_{p,BC}\theta_B + M_{p,BC}\left(\theta_B + \frac{2}{3}\theta_B\right) + M_{p,BC}\left(\frac{2}{3}\theta_B\right) \\ &= \frac{10}{3}M_{p,BC}\theta_B \end{aligned}$$

At collapse,

$$2560\theta_B = \frac{10}{3}M_{p,BC}\theta_B$$

so

$$M_{p,BC} = \frac{2560 \times 3}{10} \qquad \Rightarrow \qquad M_{p,BC} = 768\,\text{kNm}$$

1.2 Plastic analysis of span AB

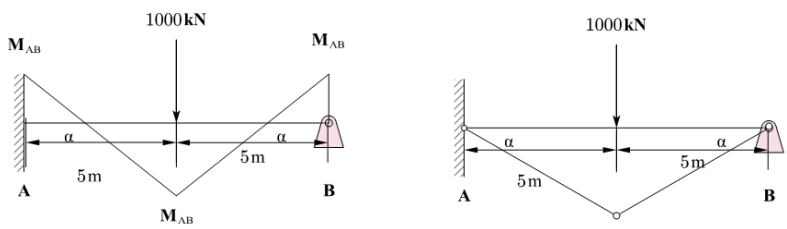

Figure 2: Collapse mechanism adopted for span AB.

For span $AB = 10\,\text{m}$, take hinges at A, at the midspan of AB, and at B. The support hinge at B is already fixed by the span BC mechanism, so $M_B = M_{p,BC} = 768\,\text{kN m}$. The fixed-end hinge at A and the positive hinge in span AB therefore both require moment $M_{p,AB}$.

Let the end rotations be θ. The deflection at the central point load $P = 1000\,\text{kN}$ is

$$\delta = 5\theta$$

The internal and external work are

$$\begin{aligned} W_i &= M_{p,AB}\theta + 2M_{p,AB}\theta + M_{p,BC}\theta \\ &= (3M_{p,AB} + 768)\,\theta \\ W_e &= 1000(5\theta) = 5000\theta \end{aligned}$$

At collapse, $W_i = W_e$, so

$$5000 = 3M_{p,AB} + 768 \qquad \Rightarrow \qquad M_{p,AB} \approx 1411\,\text{kNm}$$

1.3 Plastic analysis for span CD

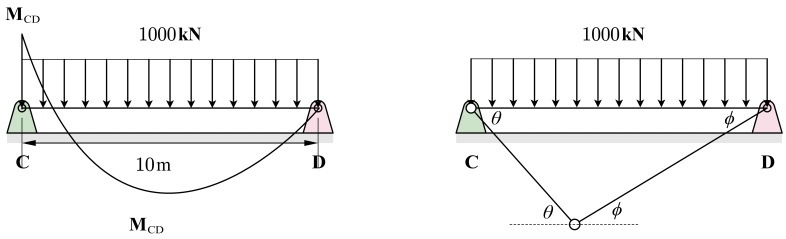

Figure 3: Collapse mechanism adopted for span CD.

For span CD, the negative support hinge at C is again taken from the span BC result, so $M_C = M_{p,BC} = 768\,\text{kN m}$. Let the positive hinge formed within the span require moment $M_{p,CD}$, and let its distance from C be x, while D remains the actual end support.

From compatibility,

$$x\theta = (12 - x)\phi \qquad \Rightarrow \qquad \phi = \frac{x}{12 - x}\theta$$

The external work under the uniform load $w = 100\,\text{kN/m}$ is

$$W_e = 100\left(\frac{1}{2} \cdot 12 \cdot x\theta\right) = 600x\theta$$

The internal work is

$$W_i = M_{p,BC}\theta + M_{p,CD}\,(\theta + \phi) = 768\theta + M_{p,CD}\theta\left(\frac{12}{12 - x}\right)$$

Equating external and internal work gives

$$600x = 768 + M_{p,CD}\left(\frac{12}{12 - x}\right)$$

so

$$M_{p,CD} = (600x - 768)\left(\frac{12 - x}{12}\right)$$

The critical mechanism is obtained from

$$\frac{dM_{p,CD}}{dx} = 0 \qquad \Rightarrow \qquad x = 6 + \frac{768}{1200} = 6.64\,\text{m}$$

Hence,

$$M_{p,CD} = (600(6.64) - 768)\left(\frac{12 - 6.64}{12}\right) \approx 1436\,\text{kNm}$$

The plastic resistance for the three spans is $M_{p,BC} = 768\,\text{kNm}$, $M_{p,AB} \approx 1411\,\text{kNm}$, and $M_{p,CD} \approx 1436\,\text{kNm}$.

1.4 Line Sketch and Justification

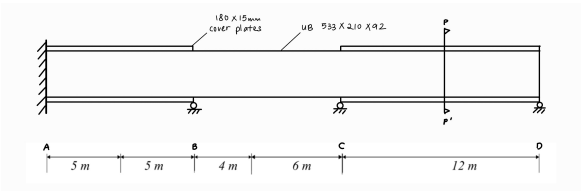

Figure 4: Reinforced beam layout

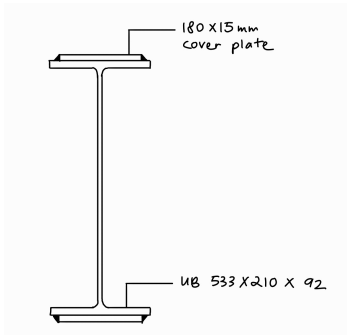

Figure 5: Welded cover plate reinforced beam cross-section

The member is first sized on the basis of the minimum required plastic resistance in span BC, where $M_{p,BC} = 768$ kNm. For S355 steel with $f_y = 355$ MPa and $\gamma_{M0} = 1.0$, the required plastic section modulus is

$$W_{pl,\text{req}} = \frac{768 \times 10^6}{355} = 2.16 \times 10^6 \text{ mm}^3$$

A UB $533 \times 210 \times 92$ section, with $W_{pl} = 2.36 \times 10^6$ mm^3, is therefore adopted as the base section. This provides adequate plastic resistance for span BC while maintaining a uniform beam depth.

In the critical strengthened region, the required plastic moment resistance is 1436 kNm. The corresponding required plastic section modulus is

$$W_{pl,\text{req,str}} = \frac{1436 \times 10^6}{355} = 4.05 \times 10^6 \text{ mm}^3$$

Since the selected UB section provides only 2.36×10^6 mm^3, an additional plastic modulus of

$$\Delta W_{pl} = 4.05 \times 10^6 - 2.36 \times 10^6 = 1.69 \times 10^6 \text{ mm}^3$$

must be provided. This is achieved by welding flange plates to the top and bottom flanges in the regions of high bending moment. Assuming plates of width approximately equal to the flange width, $b_p = 210$ mm, the required plate thickness from a first-order plastic modulus estimate is obtained from

$$\Delta W_{pl} \approx 2\, b_p t_p \left(\frac{d}{2} + \frac{t_p}{2} \right)$$

Taking $d = 533$ mm,

$$1.69 \times 10^6 = 2(210) t_p \left(266.5 + \frac{t_p}{2} \right)$$

which gives

$$t_p \approx 14.7 \text{ mm}$$

Hence, 180×15 mm flange plates welded to both flanges may be adopted to increase the plastic resistance to the required level such as in Figure 5. The plates should be installed along spans AB and CD where the design bending moment M_{Ed} exceeds the orginal bending moment resistance of the beam.

A minimum rolled UB section is adopted based on the governing plastic moment demand in span BC, avoiding global over-design and reducing overall steel tonnage. Localised flange strengthening is applied only in high moment regions to increase plastic resistance where required ensuring an economical solution. A single standard UB section is used throughout as the base member to simplify procurement, handling, and erection, and to avoid stepped sections and transition splices. Although welded cover plates introduce local fabrication effort, this is limited in extent and offset by reduced material usage and simplified construction sequencing. Since fabrication and erection typically dominate total steelwork cost over material [1], standardisation combined with targeted strengthening provides an economical and constructable solution while maintaining the required plastic hinge mechanism.

2 Deliverable 1: Structural Idealisation Sketch

The roof geometry was reconstructed from the supplementary drawing using a one-to-one SketchUp model and then transferred into GSA. As shown in Figure 6(a), points labelled R define the roof profile and represent the mid-points of the roof section, while points labelled S define the support system and lower restraint points.

The second diagram shows the FE idealisation adopted for analysis. In Figure 6(b), green denotes beam elements used for the roof profile, red denotes the high tie modelled as a tie element, and blue denotes the support-tree members modelled as bar elements. In GSA, beam elements model axial, bending and torsional effects, bar elements provide axial stiffness only, and tie elements are axial-only elements with zero stiffness in compression. This makes beams suitable for the roof rafters, bars suitable for the tree members, and a tie suitable for the prestressed high tie. Both end supports were modelled as fixed supports, while the pin-connected members were treated consistently on both sides because the connected elements were assumed not to transfer bending moment. This idealisation captures the main load path and preserves the key dimensions required for later loading, validation and mesh sensitivity studies. The corresponding baseline Mesh 1 arrangement used for the later refinement study is shown in Figure 6(c).

Because both the arch rafter and tusk rafter vary in depth along their length, the roof-profile members were implemented in GSA using tapered 1D beam elements rather than prismatic sections. Oasys GSA states that a 1D element can taper between end 1 and end 2 when it is assigned a tapering section profile with two section sizes, and that when a tapering member is divided into multiple elements a taper offset is used so that each element retains the correct local dimensions from its position along the original member [2]. This is important for the present roof model because the varying rafter depth changes the member bending stiffness along the span, so representing that taper improves the fidelity of the global frame idealisation.

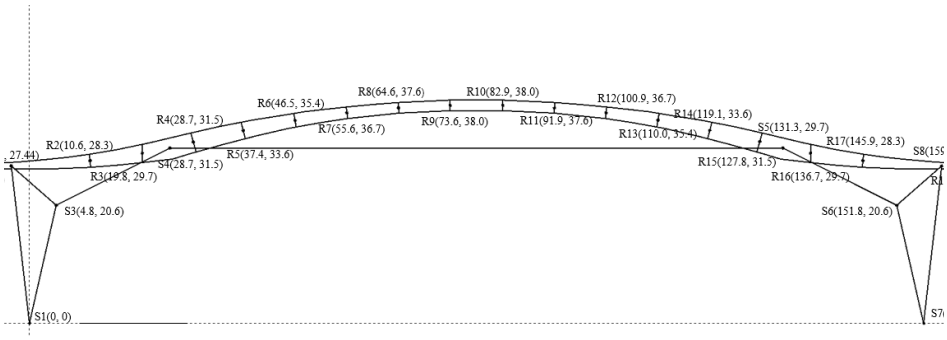

(a) Reconstructed nodal geometry.

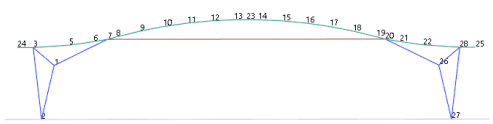

(b) Idealised FE member types.

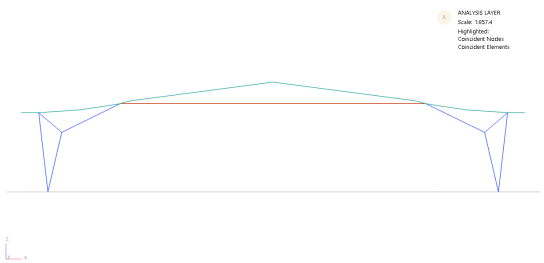

(c) Baseline Mesh 1 layout used for the later refinement study.

Figure 6: Geometry adopted for the global model and baseline mesh layout.

3 Deliverable 2: Material, Section, and Loading Data

The global FE model used linear-elastic steel. In accordance with the brief, all members were assigned an elastic modulus of 200 GPa (E), a Poisson's ratio (ν) of 0.30 and density (ρ) of 7850 kg m^{-3} so that self-weight could be included automatically in GSA. A nominal S235 grade was assigned to the primary roof members only to complete the material definition; for this linear-elastic study, the response is governed by stiffness and density. The twin high-tie strands were represented by one equivalent prestressed tie element with the same total area and an initial prestress of 450 MPa.

Only vertical symmetric loading was considered. The characteristic permanent roof load was taken as the sum of the aluminium standing seam roof (0.10 kPa), structural deck (0.15 kPa), insulation/acoustic layers (0.40 kPa) and the service allowance (0.15 kPa), giving $G_k = 0.80$ kPa. The imposed live load was $Q_k = 0.60$ kPa. The governing vertical ultimate limit state (ULS) combination used in the model was

$$1.35G_k + 1.5Q_k \tag{1}$$

Using the 18 m frame spacing stated in the supplementary roof information, these area loads were converted to line loads for one 2D frame. This gives a superimposed permanent load of 14.4 kN m^{-1} (0.80×18) and an imposed live load of 10.8 kN m^{-1} (0.60×18), while member self-weight was included separately through the material density. This projected-area conversion is consistent with common roof-loading practice and Eurocode 1 snow-load treatment [3].

The strap members were modelled as bar elements, so only axial stiffness was represented using an equivalent steel area of $A = 2\times500\times40 = 40\,000$ mm^2. The spacing between the two plates was neglected because the bar elements do not carry bending.

Because the arch and tusk rafters vary in depth along their length, they were assigned tapered 1D sections in GSA. The taper-offset concept used when such members are subdivided is shown in Figure 7, adapted from Oasys GSA [2]. The adopted member sections and modelling notes are summarised in Table 1.

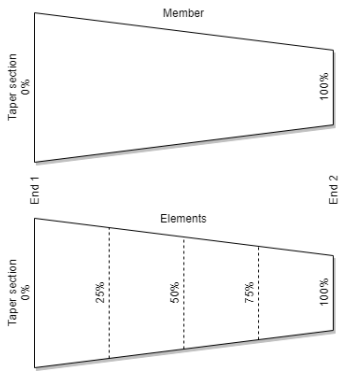

Figure 7: Taper offset used for subdivided tapered 1D elements, adapted from Oasys GSA [2].

Table 1: Section data adopted for the global model

Member	Section	Modelling Note
Arch rafter	Welded box, 800 mm wide, 50 mm wall thickness	Depth varies from about 1.8 m to 3.8 m along the roof profile
Tusk rafter	Welded I-section, 50 mm plate thickness	Overall depth varies from about 0.9 m to 3.8 m
Legs and arms	Circular Hollow Section (CHS) 914 mm × 40 mm	Taken directly from the supplementary sketch
Wings	CHS 711 mm × 50 mm	Taken directly from the supplementary sketch
High tie	Twin locked-coil strands, 2 × 115 mm	Modelled as one equivalent tie element with the same total cross-sectional area; prestressed to 450 MPa
Straps	Equivalent rod area 40 000 mm^2	Based on two 500 mm × 40 mm plates; bending stiffness neglected

4 Deliverable 3: Initial Model Validation

4.1 Assumptions

The validation uses a simplified 2D in-plane frame under symmetric vertical loading only. Out-of-plane action, torsion, adjacent-frame load sharing, detailed connection stiffness and local stability effects are excluded, so the check is intended to validate the global gravity-load response rather than detailed 3D behaviour.

4.2 Model Validation

Because the prestressed arch-and-tie system is difficult to solve reliably by hand, the initial validation was carried out on the non-prestressed model using two simple checks. Using the projected roof length of about 175 m from the supplementary information and the tributary frame spacing of 18 m, the total ULS vertical load from roof dead and live loads is

$$W = (1.35 \times 0.80 + 1.5 \times 0.60) \times 175 \times 18 \approx 6237\,\mathrm{kN}$$

GSA gives a corresponding total vertical load of about 6277 kN, a difference of only 0.6 %, which confirms that the roof surface loads have been converted and applied consistently considering the dead load is not projected in the real model.

The tusk-to-arch connection moment was then checked by idealising the loaded tusk as a 25 m cantilever under the equivalent ULS line load $w = 1.35 \times 14.4 + 1.5 \times 10.8 = 35.64\,\mathrm{kN\,m^{-1}}$. This gives $M = wL^2/2 \approx 11\,125\,\mathrm{kN\,m}$, compared with an FE result of about 16 490 kN m, as shown in Figure 8. The FE value is higher because it includes the stiffness of the curved arch and frame redistribution, but the hand check confirms the correct order of magnitude. Together, the two checks validate both the applied gravity loading and the level of bending response at a critical connection.

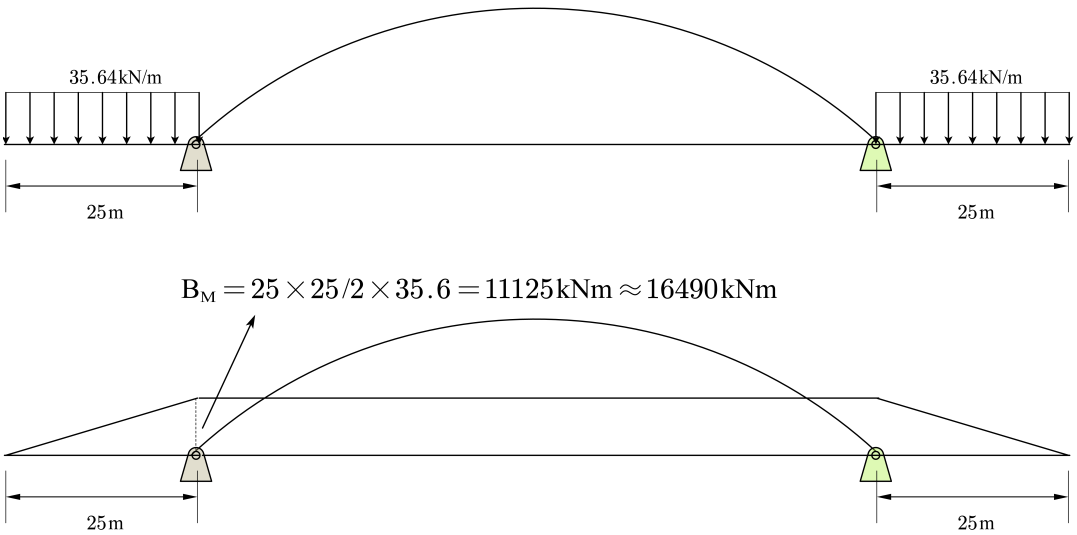

Figure 8: Hand validation of the tusk-to-arch connection bending moment.

4.3 Validated Aspects

The checks validate three key features of the model: conversion of roof area loads into the equivalent 2D frame loads, overall vertical equilibrium through the support reactions, and the order of magnitude of bending at the tusk-to-arch connection. The GSA solver ran without instability warnings, the vertical reactions balanced the applied gravity loads, and the reconstructed geometry matched the source drawing within about 0.5%. The model is therefore adequate for initial global behaviour and sensitivity studies under symmetric vertical loading, but not for detailed 3D local assessment.

5 Deliverable 4: Mesh Refinement Sensitivity Study

5.1 Convergence Study Methodology

Three mesh densities were evaluated. Mesh 1 is the coarsest representation of the arch, Mesh 2 retains more intermediate points, and Mesh 3 preserves the full coordinate set taken from the supplementary geometry. Arch central deflection, high-tie axial force, arch central bending moment, and tusk-arch connection bending moment were tracked to judge convergence. For a quantity of interest q, the convergence measure between successive meshes was taken as

$$\varepsilon_q = \left| \frac{q_n - q_{n-1}}{q_n} \right| \times 100\%$$

and a value below 2% was adopted for the governing global response quantities; this is conservative relative to the 1–5% range reported for average stress-related displacements at high accuracy [4].

Only the bending-dominated roof-profile members were discretised further in this mesh study. Pure axial members, such as those represented by bar or tie elements, were not subdivided because the present analysis is geometrically linear and does not update the structural geometry during the solution. Since no updated geometry is introduced, splitting one straight axial-only member into several collinear elements would not change its force path or stiffness representation in any meaningful way, so further discretisation of those members would not improve the results.

Table 2: Influence of arch mesh density on key global responses. Percentages in parentheses denote absolute change relative to Mesh 3.

Mesh	Arch Elements	DoF	Arch Defl. (mm)	Tie Force (kN)	Arch Mid BM (kNm)	Tusk-Arch BM (kNm)
Mesh 1	14	53	241.2 (37.6%)	9725 (4.3%)	12760 (6337.9%)	4721 (19.1%)
Mesh 2	16	59	175.7 (0.2%)	9309 (0.1%)	960.2 (384.5%)	5753 (1.4%)
Mesh 3	22	77	175.3 (0.0%)	9320 (0.0%)	198.2 (0.0%)	5837 (0.0%)

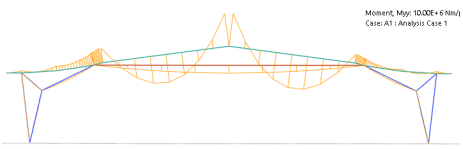

(a) Mesh 1

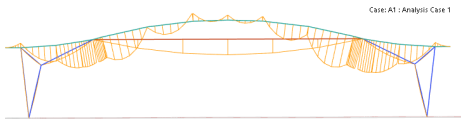

(b) Mesh 2

Figure 9: Bending-moment diagrams for Mesh 1 and Mesh 2 used in the sensitivity study.

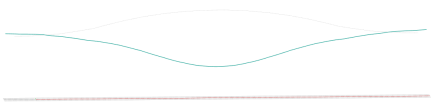

(a) Prestress neglected

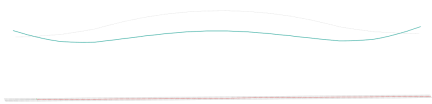

(b) Prestress included

Figure 10: Comparison of deformed shape with and without high-tie prestress.

Table 2 and Figures 9 and 10 show that Mesh 1 is too coarse. From Mesh 2 to Mesh 3, the convergence measure is 0.2% for arch central deflection, 0.1% for high-tie axial force, and 1.4% for the tusk-arch connection bending moment, so the 2% criterion is satisfied for the governing global responses. The central arch bending moment still changes by 384.5%, but it is not the governing quantity for this simplified roof model, which is controlled more by deflection, tie force and connection moment. Mesh 3 is therefore adopted for subsequent analysis.

6 Deliverable 5: Influence of Prestressing Assumptions

Table 3: Comparison between the simplified arch-only erection-stage model and the completed-frame prestress assumption

Response Quantity	Arch Only Before Lift	Full Frame After Erection	Relative Change
Maximum vertical displacement (mm)	213.3	175.3	−17.8%
Central arch bending moment (kNm)	4128	198.2	−95.2%
Tusk-arch connection bending moment (kNm)	0	5837	Not comparable
High tie force (kN)	11450	9320	−18.6%
Horizontal reaction at supports (kN)	Not comparable	3480	Not comparable

Here, "Not comparable" indicates that the quantity is not defined in the same way in the two simplified models.

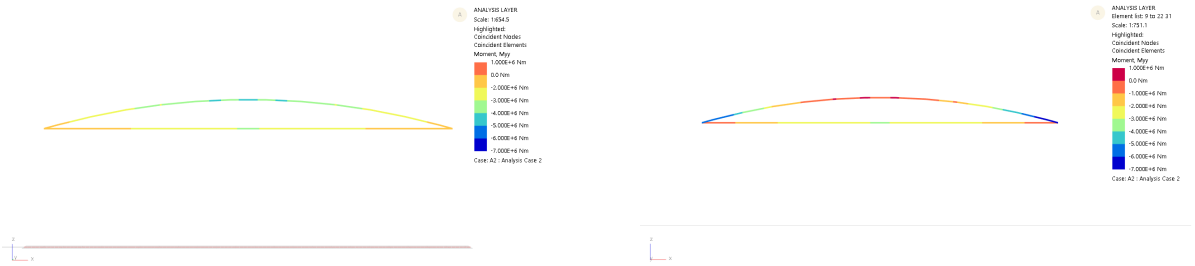

Central Arch: Prestress Before Installation

Full Frame: Prestress After Erection

Figure 11: Bending-moment response for the two prestressing assumptions considered in Deliverable 5.

6.1 Discussion of Results

Table 3 and Figure 11 show that the timing of prestress application changes the structural state significantly. Relative to the arch-only erection-stage model, the full-frame post-erection assumption reduces the maximum vertical displacement from 213.3 mm to 175.3 mm, reduces the central arch bending moment from 4128 kN m to 198.2 kN m, and lowers the high-tie force from 11 450 kN to 9320 kN. At the same time, the completed frame develops a tusk-arch connection moment of 5837 kN m, whereas the isolated arch-only model gives zero at the corresponding location. This shows that the erection-stage arch-only condition and the final completed-frame condition are not simply scaled versions of one another; the force path changes once the tusk rafters and support tree are engaged.

6.2 Implications for Design and Tolerance

The supplementary construction paper states that the central arch section was loaded and prestressed before it was lifted into place, so the completed roof does not begin from the same stress state as a model in which prestress is applied only after full erection. From a design point of view, the two assumptions do not govern the same actions: the arch-only erection-stage model gives higher overall arch bending, tie force and vertical movement, whereas the completed-frame model introduces additional connection moments after continuity is established. Tensioning the isolated arch on the ground allows contractors to actively tune the high-tie cable to achieve the exact required geometric span. This overcomes minor fabrication deviations and ensures the massive arch fits perfectly between the pre-erected support trees without requiring forced, on-site alignment. Therefore, from a tolerance point of view, fit-up should not be judged only from the final completed-frame model, because the erection-stage arch is more sensitive to locked-in force and deformation before it is connected to the tusk rafters and support tree. In particular, the force state developed during prestressing influences the alignment demand and adjustment required at the tusk-arch connection during erection. Therefore, the arch-only model is the more appropriate basis for interpreting erection-stage behaviour and fit-up tolerance at the tusk-arch connection, while the full-frame post-erection model is more appropriate for assessing the final in-service structural response.

7 Deliverable 6: Boundary Conditions for More Detailed Analysis

For detailed analysis, the tusk-to-arch rafter splice should be extracted as a local submodel to resolve the complex stress distributions within the splice plates, bolts, welds, and adjacent section walls, details the global beam idealisation cannot accurately capture. To prevent boundary restraints from inducing artificial stress concentrations, the local model should include a short length of member on each side of the splice so that the boundary conditions are applied away from the connection itself. A practical choice would be to include approximately one section depth on either side of the splice.

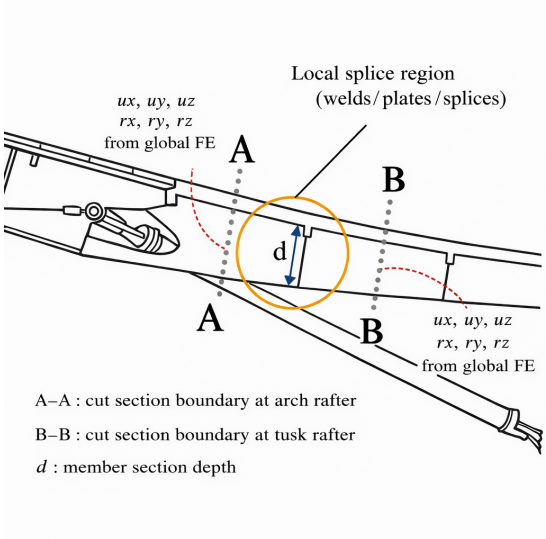

Figure 12: Recommended boundary conditions for the local splice model

The preferred boundary condition is to impose the displacement and rotation components extracted from the global beam model at the two cut faces of the local model. In practice, each cut face can be coupled to a reference node so that the sectional deformation remains compatible with the global model. The six kinematic quantities imposed at each end are the three translations (u_x, u_y, u_z) and the three rotations (r_x, r_y, r_z). This approach is preferable to simply fixing one end, because it reproduces the actual deformation state of the connection and avoids introducing artificial restraint moments.

The corresponding section forces should also be checked against the global model outputs. The main actions expected at the splice are axial force N, vertical shear V, bending moment M, and a smaller torsional component due to the curved roof geometry and eccentricity of the connection detail. If forces are imposed directly at the cut faces, this is less reliable than displacement-based transfer because the local stiffness of the detailed splice model differs from that of the global 1D beam model, so small changes in plate, bolt, weld, or contact stiffness can produce large changes in the resulting reaction-force distribution. In addition, the model relies on an idealised 2D frame of 1D beam elements and therefore does not accurately capture the true 3D traction distribution across the cut faces or the complex stress flow through the splice plates, bolts and welds. Futhermore, according to Saint-Venant's principle, local stresses near idealised joints or load applications in the model are highly dependent on the mathematical simplifications made, meaning that the local stresses at the joint in the model will likely be exaggerated.

To prevent rigid body motion in the local model, one reference node may be lightly stabilised after the global displacements have been assigned. This stabilisation should only remove numerical singularities and must not alter the transferred load path. Contact, bolt preload, or weld representation can then be added depending on the intended level of detail. For the purposes of this coursework, the key requirement is that the splice boundaries are driven by the global model response rather than by arbitrary fixed supports. Section cuts are located approximately one local section depth away from the splice connection along the axis of the member. This avoids local stress disturbance. As the depth varies along the rafter, the local section depth is equal to the splice-region depth, cuts A–A and B–B are placed approximately one section depth from the splice on either side. At both cut faces, the translational and rotational displacements extracted from the global FE model are imposed. This ensures compatibility between the local splice model and the global structural response.

References

[1] Steve Barg, Forest Flager, and Martin Fischer. An analytical method to estimate the total installed cost of structural steel building frames during early design. *Journal of Building Engineering*, 15:41–50, 2018.

[2] Oasys. GSA Documentation: Elements. `https://docs.oasys-software.com/structural/gsa/references/hidr-data-element/index.html`, 2026. Accessed March 20, 2026.

[3] British Standards Institution. BS EN 1991-1-3:2003+A1:2015 Eurocode 1: Actions on structures. General actions. Snow loads, 2015.

[4] ANSYS, Inc. Mechanical User's Guide: Using Adaptive Convergence. `https://ansyshelp.ansys.com/public/Views/Secured/corp/v242/en/wb_sim/ds_Convergence.html`, 2024. Accessed March 24, 2026.