CUI Devices is now Same Sky! Learn More

SERIES: TS40 | DESCRIPTION: TACTILE SWITCH

FEATURES

- red actuator
- black actuator
- 160 & 260 gf

SPECIFICATIONS

parameter	conditions/description	min	typ	max	units
rated voltage		1		12	Vdc
rated current		0.01		50	mA
withstanding voltage	for 1 minute		250		Vac
contact resistance	applying load of 2 times operating force at 5 Vdc, 10 mA			100	mΩ
insulation resistance	at 100 Vdc for 1 minute	100			MΩ
operating force	160 gf models 260 gf models	110 190	160 260	210 330	gf gf
return force		20			gf
actuator travel		0.20	0.30	0.40	mm
operating temperature		-20		70	°C
storage temperature		-40		85	°C
life	rated load, 2 cycle/second, 1.5 times operating force		100,000		cycles
vibration	10~55~10 Hz, 1.5 mm amplitude, 2 hours on each XYZ				
flammability rating	see material table				
RoHS	yes				

PART NUMBER KEY

TS40 - 66 - XX - XX - XXX - SMT - TR

Base Number

Actuator Height above PCB:
*33 = 3.3 mm
38 = 3.8 mm
43 = 4.3 mm
45 = 4.5 mm
50 = 5.0 mm
55 = 5.5 mm
70 = 7.0 mm

Actuator Color:
BK = black
R = red

Push Force:
160 = 160 gf
260 = 260 gf

Note: *3.3 mm height option only available with black actuator.

MECHANICAL DRAWING

units: mm
tolerance: ±0.2 mm
unless otherwise noted

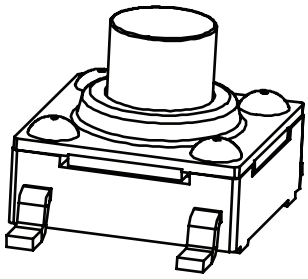

DESCRIPTION	MATERIAL	PLATING/COLOR
terminals	brass	silver
housing	PPA (UL94HB)	black
contacts	SUS	silver
cover	SUS	--
waterproof silicone	silicone	black
stem	PPA (UL94HB)	see part number key

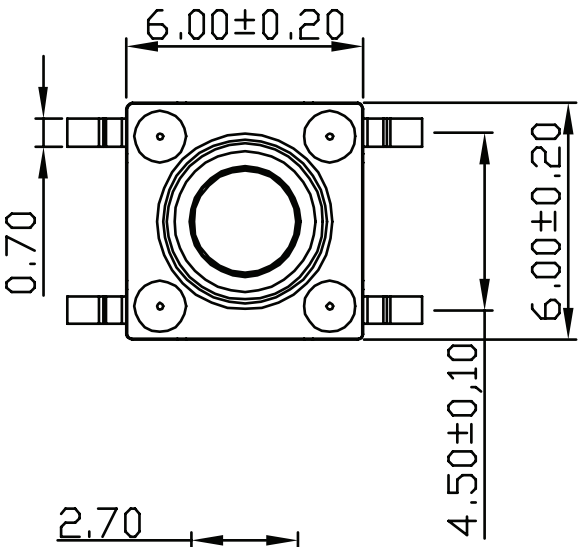

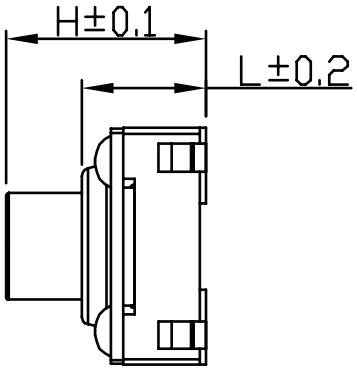

ACTUATOR POSITION [ ]: MOMENTARY	
NORMAL	DOWN
OFF	[ON]
SCHEMATIC	

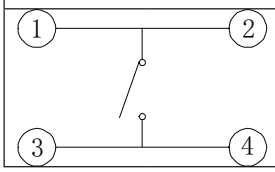

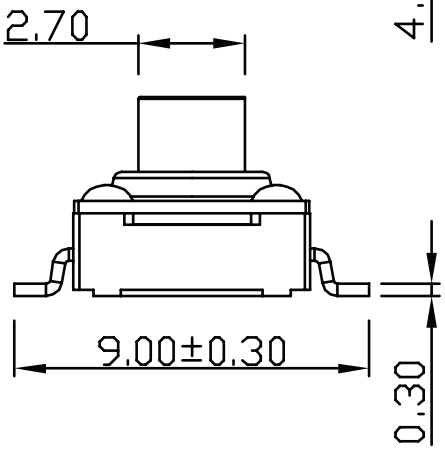

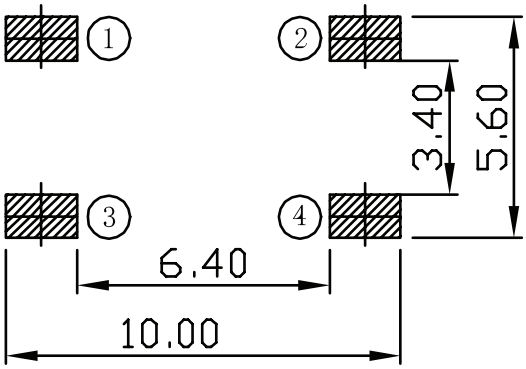

Recommended PCB Layout
Top View

Height Table					
Actuator Height Models	H	L	Actuator Height Models	H	L
33	3.3 mm	2.80 mm	50	5.0 mm	3.15 mm
38	3.8 mm		55	5.5 mm	
43	4.3 mm	3.15 mm	70	7.0 mm	
45	4.5 mm				

SOLDERABILITY

parameter	conditions/description	min	typ	max	units
hand soldering	for maximum 3 seconds			350	°C
reflow soldering	see reflow profile			260	°C

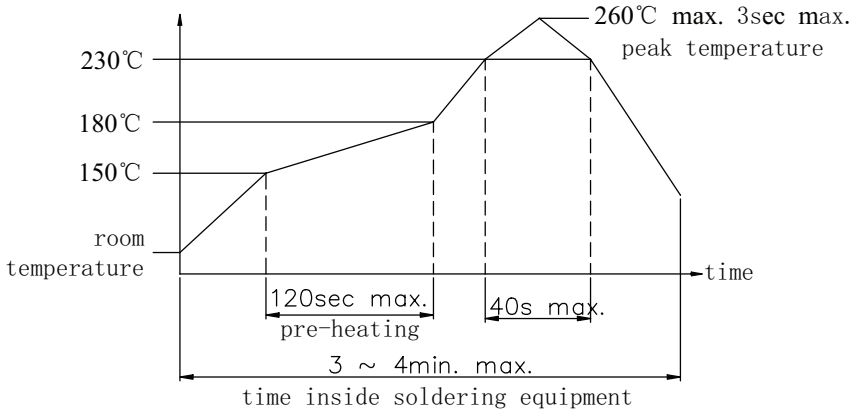

PACKAGING

Packaging Table		
Actuator Height Models (mm)	Reel Size (mm)	Reel Qty
3.3-3.8	Ø330	1,500
4.3-5.5	Ø330	1,000
7.0	Ø330	700

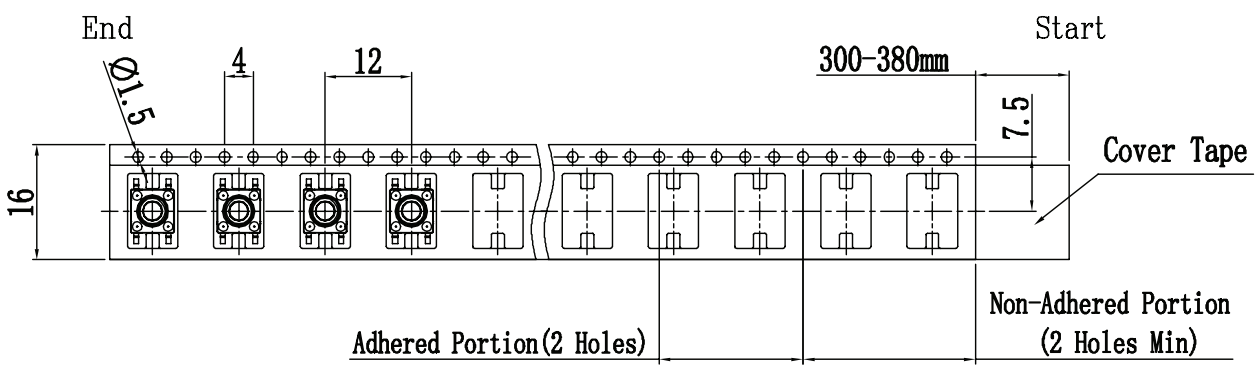

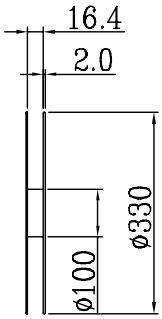

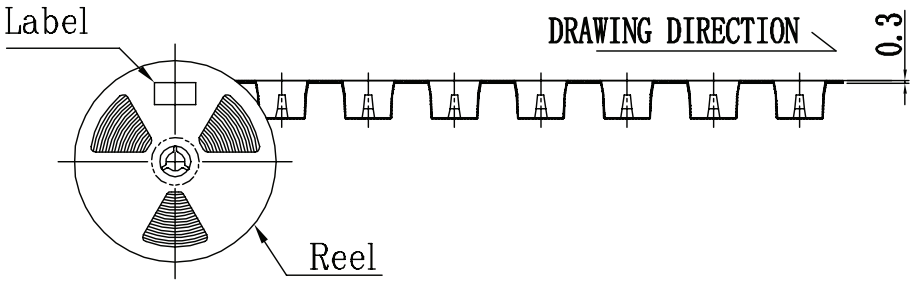

REVISION HISTORY

rev.	description	date
1.0	initial release	11/20/2025

The revision history provided is for informational purposes only and is believed to be accurate.

Same Sky offers a one (1) year limited warranty. Complete warranty information is listed on our website.

Same Sky reserves the right to make changes to the product at any time without notice. Information provided by Same Sky is believed to be accurate and reliable. However, no responsibility is assumed by Same Sky for its use, nor for any infringements of patents or other rights of third parties which may result from its use.

Same Sky products are not authorized or warranted for use as critical components in equipment that requires an extremely high level of reliability. A critical component is any component of a life support device or system whose failure to perform can be reasonably expected to cause the failure of the life support device or system, or to affect its safety or effectiveness.