Can quantum imaging be classically simulated?

Milena D'Angelo, and Yanhua Shih
Department of Physics, University of Maryland, Baltimore County, Baltimore, Maryland 21250
(Dated: 24 February, 2003)

Quantum imaging has been demonstrated since 1995 by using entangled photon pairs. The physics community named these experiments "ghost image", "quantum crypto-FAX", "ghost interference", etc. Recently, Bennink et al simulated the "ghost" imaging experiment by two co-rotating **k**-vector correlated lasers. Did the classical simulation simulate the quantum aspect of the "ghost" image? We wish to provide an answer. In fact, the simulation is very similar to a historical model of local realism. The goal of this article is to clarify the different physics behind the two types of experiments and address the fundamental issues of quantum theory that EPR was concerned with since 1935.

PACS numbers: 03.65.Ud, 03.65.Ta, 42.30.Va, 42.50.St

arXiv:quant-ph/0302146v2 25 Feb 2003

A series of nonlocal quantum imaging experiments have been realized, since 1995, using entangled photon pairs generated in spontaneous parametric down conversion (SPDC) [1],[2], [3]. The physics community named them "ghost image", "quantum crypto-FAX", "ghost interference", etc. Those experiments have demonstrated the peculiar behavior of entangled states. The insertion of an optical element, mask or single-double-multi-slit in the arm in which one of the entangled photon propagates, allows observing either an image (in the position defined by two-photon Gaussian thin lens equation [2]) or the Fourier transform of the object (in the far field zone [1]) when joint detections of the pair are registered. However, neither of the single detections in either arm is able to reconstruct the image or to give the Fourier transform of the object. This effect has later been used in a two-photon Young's interference-diffraction experiment to demonstrate the working principle of quantum lithography [4], [5]. By measuring the interference-diffraction pattern on the Fourier transform plane, we showed that the spatial resolution of a two-photon image could be improved by a factor of 2, beyond the diffraction limit. In fact, a two-photon entangled state at wavelength λ produces a Fourier transform pattern equivalent to the one given by classical light (single photon) at wavelength $\lambda/2$. This effect was well explained by considering the entangled nature of the photon pair, i.e., the coherent superposition of the two-photon amplitudes.

Recently, Bennink *et al.* simulated the "ghost" imaging experiment using two classically **k**-vector correlated pulses emitted by co-rotating lasers [6]. An object is inserted in the arm in which one of the pulses propagates while the other pulse propagates freely in a separate arm; by recording coincidences between pulses of each pair, shot by shot, this experiment has also reconstructed an "image" of the object in the joint detections.

Has the recent classical experiment simulated the quantum aspects of the "ghost" image? We wish to provide an answer in this article by analyzing and comparing the "ghost" image experiment with its recent classical simulation. In fact, the simulation is very close to a historical model of local realism for an entangled two-particle system. Our goal is to clarify the very different physics behind the two types of experiments and address the fundamental issues of quantum theory that Einstein-Podolsky-Rosen was concerned with since 1935 [7]. In addition, important practical advantages of quantum imaging will be emphasized.

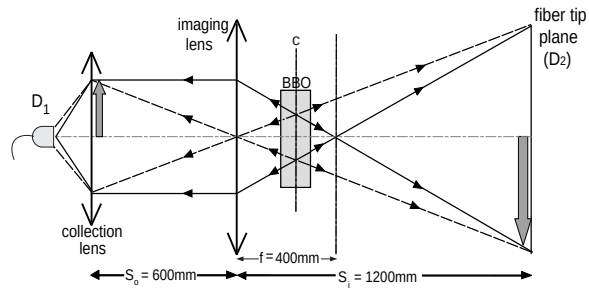

FIG. 1: Unfolded version of the two-photon "ghost" imaging experiment. The SPDC source (BBO crystal) emits bi-photon wave packets: the momentum-momentum correlation of the two-photon system is defined with certainty but the momentum of the signal and the idler separately is completely undefined. The image of the object is the result of a click-click joint detection of a pair. The straight lines correspond, schematically, to all possible two-photon amplitudes. Note that even if they have different propagation directions, they are indistinguishable for a joint detection event. This allows the possibility for the imaging lens to create an image of the object at position S_i such that: $1/S_o + 1/S_i = 1/f$. The spatial resolution is limited by two-photon diffraction, as resulting from the superposition of the two-photon amplitudes.

To compare two-photon "ghost" imaging with its classical simulation, let us consider the "unfolded" version of both the "ghost" image experiment, as realized in Ref. [2], and its classical simulation, as realized in Ref. [6]. The schematic experimental diagrams are shown in Fig. 1 and Fig. 2, respectively.

In the quantum two-photon imaging experiment a pair of signal-idler photon is generated in the process of SPDC inside a nonlinear crystal (BBO). The state of the signal-idler pair can be calculated by the first order perturbation

theory and has the form [10]:

$$|\Psi\rangle = \int d\mathbf{k}_i, d\mathbf{k}_s \delta(\mathbf{k}_s + \mathbf{k}_i - \mathbf{k}_p)\delta(\omega_s + \omega_i - \omega_p) \\ a_s^\dagger(\mathbf{k}_s)\ a_i^\dagger(\mathbf{k}_i) \mid 0\rangle \tag{1}$$

where ω_j, $\mathbf{k_j}$ $(j = s, i, p)$ are the frequency and wavevector of the signal, idler and pump, respectively, and $a_s^\dagger$ and $a_i^\dagger$ are the creation operators for the signal and idler photons, respectively. The energy and momentum for neither signal nor idler photon is defined. However, the energy-energy and momentum-momentum correlations of the pair are defined with certainty, as expressed by the delta functions, which are technically called phase matching conditions:

$$\omega_s + \omega_i = \omega_p, \quad \mathbf{k}_s + \mathbf{k}_i = \mathbf{k}_p, \tag{2}$$

In the degenerate case, $\omega_s = \omega_i$, the transverse wave vector phase matching requires the signal and idler belonging to one pair to be emitted at equal, yet opposite, angles relative to the pump. In other words, the propagation direction for either photon may have a great uncertainty, but the correlation of the emission angle is determined with certainty. This then allows for a simple pictorial viewing of the experiment in terms of "usual" geometric optics, treating the SPDC crystal as a "mirror". This concept has been simplified in Fig. 1 by drawing straight lines representing the probability amplitudes, or the quantum "pathways", associated with a signal-idler pair. Note that: 1) each straight line represents a two-photon amplitude, defining a *possible* special momentum-momentum correlation with a defined propagation direction of the signal-idler pair; 2) all the two-photon amplitudes belong to *one pair* of signal-idler photon, they exist *simultaneously and are indistinguishable*. The insertion of an optical lens ("imaging lens" in Fig. 1) in the signal side allows the two-photon amplitudes to make an image of the object on the idler side. The image appears in coincidence measurement between D_1 and D_2, while single counts on D_1 and D_2 are both constant. The location of the object plane and the image plane is defined by the two-photon Gaussian thin lens equation: $1/f = 1/S_i + 1/S_o$, with f, S_i and S_o as defined in Fig. 1. Indeed, from the geometric point of view, the image and object are related by a precise point-to-point correspondence, which represents the position-position correlation of the pair. In principle, the entire image of the entire object is formed by the two-photon probability amplitudes of *one pair*. All the two-photon amplitudes that end on the object plane and the image plane are indistinguishable, which allows the image to be coherent. The quantum image is then very special: (1) it is useful for some cryptography-type applications; (2) it may be sub-diffraction limited, since its spatial resolution is determined by the superposition of the two-photon amplitudes.

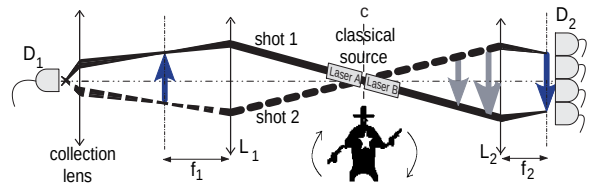

FIG. 2: Unfolded version of the classical simulation using two laser beams. A well-defined momentum characterizes each laser beam. The apparatus works as a projector: a projection of the object is formed, shot by shot, anywhere on the right side of the source. There is no need of an imaging lens and no lens-image equation to satisfy. The use of lenses is for reducing the spot size of the laser beams, which determines the spatial resolution of the projection. As a matter of fact, two correlated guns could give the same result.

On the other hand, the classical simulation represented in Fig. 2, employs two co-rotating **k**-vector correlated laser beams (pulses), each of them pointing in a *well defined direction*. The pulses "know" where to go in the course of their propagation. Each pair of pulses can be focalized at a defined point on the object and the "image" plane with the help of lenses L_1 and L_2, respectively. Consequently, a point on the object plane is *projected* onto the "image" plane at the CCD camera by recording "coincidences" shot by shot. This shot by shot, point-to-point projection works like a "two way" "Chinese shadow". It should be emphasized that one pair of laser pulses can project only one point and each projection event is well distinguishable from the others. Consequently, the result of this experiment is a *collective projection*. The spatial resolution of the projection is determined by the spot size of the laser beam on the object and "image" plane. The use of lenses L_1 and L_2 is for reducing the spot size of the laser beam. In principle, L_1 and L_2 are not necessary for the projection to be realized. There is no general lens-image equation to satisfy: the "image" plane is independent of the object plane and is fixed only by the position of L_2, which can be inserted everywhere on the right side. As a matter of fact, two correlated guns could give the same result.

It is clear at this point that the two-photon "ghost" image experiment works as a coherent imaging system (Fig. 1) while the classical simulation works as a shot by shot, point-to-point projector (Fig. 2).

In the above picture of two-photon entanglement, the entangled two-photon state of SPDC and the two-photon probability amplitudes play the fundamental role. Indeed, to simulate the quantum aspect, one needs to simulate the coherent superposition of the two-photon amplitudes. In principle, the simulation should produce the entire object-image point-to-point correlation with one pair of laser pulses instead of shot-by-shot.

We may have to answer the following questions: Are we sure the above picture of quantum entanglement is phys-

ically true? And since in both experiment the final result is obtained by counting coincidences between either two-photon or two pulses, are we sure the real physical process in the measurement of the"ghost" image is not the same as in the classical simulation? In fact, the picture of quantum entanglement has never been accepted by local realism. Since 1935, Einstein-Podolsky-Rosen [7] were seriously concerned with the physics of entangled two-particle system and questioned it. The "ghost" image appears as a "nonlocal" effect, which EPR [7] consider as an absurd "action-at-a-distance"; they reject this idea and conclude that when the pair is created it has to be predetermined for it "where to go", just like in the classical simulation.

We will try to answer the above questions in the following way: (1) confirm that, in the two-photon image-type experiment, the two-photon probability amplitudes play the fundamental role; (2) show that, the classical simulation can never simulate the two-photon probability amplitudes and their coherent superposition; (3) demonstrate an unique advantage of two-photon coherent imaging, which, in principle, can never be realized by classical simulations.

Is it true that the two-photon probability amplitudes play the fundamental role? One may find the answer studying the spatial resolution of the "ghost" image. The spatial resolution of an image, assuming the use of perfect lenses, is basically determined by diffraction or equivalently by the uncertainty relations [12]. If one could show that the diffraction effect in a two-photon imaging type experiment is due to the superposition of the two-photon amplitudes, it would be possible to conclude that the two-photon amplitudes are also responsible for the formation of the image itself. In order to study the spatial resolution of an image it may be easier to move our attention from the image plane to the Fourier transform plane of the object. The sister experiment of the "ghost" image, which received the name of "ghost interference" [1], may serve this purpose. The experimental setup was very similar to the "ghost" image experiment and used the same two-photon source of entangled state (SPDC). Fig. 3a is an unfolded version of the schematic experimental setup. A Young's double-slit serves as a "complicated pattern" - the object. The measurement was done by counting coincidences in the far-field-zone to study the two-photon Fourier transform of the double-slit.

The experimental result is very surprising from the viewpoint of classical physics. There is no interference pattern behind the double-slit. However, the joint detections reproduce an interference-diffraction pattern when detector D_2 is scanned across the idler beam while D_1 is fixed. The lack of first order interference is due to the poor spatial coherence of the signal beam, i.e., the diverging angle of the beam for a given wavelength λ is greater then λ/d where d is the spacing between the double-slit. The two-photon interference-diffraction pattern is predicted by quantum entanglement theory and the prediction agrees with the experimental result. The interference-diffraction pattern which appears measuring coincidences is:

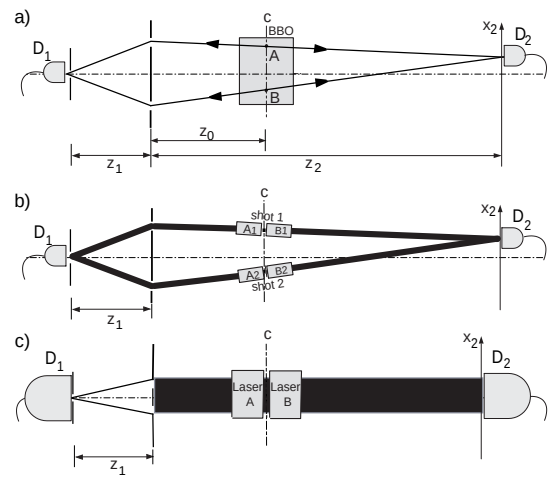

FIG. 3: a) Unfolded version of the two-photon "ghost" interference experiment. The two-photon Fourier transform of the double slit is the result of a click-click joint detection of an entangled photon pair. b) A pair of co-rotating laser beams is used to simulate classically the two-photon amplitudes, shot by shot. c) Another approach for the classical simulation. A single pair of lasers is used to cover simultaneously both the upper and the lower slit.

$$R_c(x_2) \propto sinc^2(x_2\pi a/\lambda z_2)\cos^2(x_2\pi d/\lambda z_2) \qquad (3)$$

where a is the slit width, λ is the central wavelength of signal and idler, x_2 is the coordinate of detector D_2. This is a standard Young's double slit interference-diffraction pattern, except for the fact that z_2 is the distance from the double-slit, back to the SPDC crystal, and then forward to the scanning detector D_2 (in analogy to the definition of S_i in the "ghost" image). It is straightforward to calculate the pattern of Eq. 3 from the entangled two-photon state of SPDC. To simplify the discussion, let us consider the interference first. The probability of joint detections is proportional to the norm squared of $< 0|E_1^+E_2^+|\Psi >$, where E_1^+ and E_2^+ are the field operators at detectors D_1 and D_2, respectively. As schematically represented by the straight lines in Fig. 3a, only the two-photon amplitudes that pass through the double-slit can give rise to coincidences. So we may write $|\Psi >$ as a simplified version of the general SPDC state (eq. 1), considering only the four mode state vector:

$$|\Psi\rangle = \varepsilon[a_s^\dagger a_i^\dagger + b_s^\dagger b_i^\dagger] \mid 0\rangle, \qquad (4)$$

where ε is a constant, $a_j^\dagger$ ($b_j^\dagger$) is the photon creation operator for the upper (lower) mode in Fig. 3a ($j = s, i$). Substituting the field operators and the state vector into $< 0|E_1^+E_2^+|\Psi >$, the probability of joint detections is

then given by the cosine function in Eq. 3. The diffraction pattern can be calculated by integrating the many two-photon amplitudes over the slit width ($-a/2 < x < a/2$). The interference-diffraction is the result of the coherent superposition of the two-photon amplitudes of a signal-idler pair. The straight lines in Fig. 3a are responsible for the two-photon Fourier transform of the double-slit aperture function, and consequently, for the formation of the image in Fig. 1.

Can the two-photon "ghost" interference-diffraction be simulated classically? Let us try two different approaches.

First, assume one can find a way to simulate the two amplitudes of Fig. 3a, for example by means of two pairs of laser pulses, as depicted in Fig. 3b. Pulse A passes the upper slit and the lower slit in two different shots, similarly to the "shot-by-shot" operation in ref. [6]. It is clear that there will be no interference, not even in principle. The "upper shot" and the "lower shot" are well distinguishable. What about diffraction? Pulse A itself will experience diffraction when passing the upper and the lower slit separately. In the single counts on D_1 there will be two diffraction patterns shadowing each other. However, these diffraction patterns have nothing to do with pulse B. The Fourier transform of the double-slit function is done only by laser pulse A. This is fundamentally different from the two-photon "ghost" interference-diffraction.

The second approach is illustrated in Fig. 3c. Laser beam A covers both the upper and the lower slit. In this case, one shot of laser pulse A will make a first order standard Young's interference-diffraction pattern. Again, it has nothing to do with laser pulse B.

Unless the two-photon amplitudes and the two-photon entangled state are simulated, it is impossible to obtain the two-photon Fourier transform of the double-silt.

An unique advantage of using two-photon entangled states for imaging is the improvement of the image spatial resolution, even beyond the diffraction limit. This is a hot topic of quantum lithography. Recently, we have realized a Young's double slit experiment to demonstrate the working principle of quantum lithography [4].

The philosophy of our experiment is to show that the N-photon Fourier transform of an object at wavelength λ is equivalent to the Fourier transform obtained using classical light at wavelength λ/N. This would prove that the spatial resolution of the reduced-size image obtained by a second set of lenses would be N times better. Fig. 4a is the unfolded version of the simplified experimental setup. In our experiment, a Young's double-slit played the role of the "complicated" pattern. By using two-photon entangled states emitted from SPDC under certain experimental conditions, we found that the two-photon double-slit interference-diffraction pattern, in the far field zone, has modulation period of the spatial interference smaller, and width of the diffraction pattern narrower, both by a

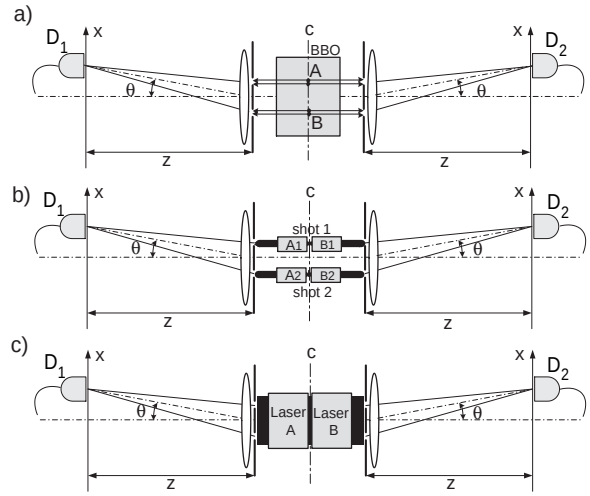

FIG. 4: a) Unfolded version of the quantum lithography experiment. b) Classical simulation, shot-by-shot, using a pair of lasers. c) Another approach of classical simulation: both laser beams cover the double-slit simultaneously.

factor of two, than those of the classical case. This means that the Fourier transform for the entangled two-photon light at wavelength λ is equivalent to the one obtained using classical light at $\lambda/2$, instead of λ. The physics and the mathematics are similar to those of the "ghost" interference experiment. Indeed, under certain experimental conditions, we managed to have the two-photon amplitudes always passing through one slit (upper or lower), as depicted in Fig. 4a. The two-photon interference-diffraction is calculated as superposition (integration) of those two-photon amplitudes over the double slit, which is:

$$P(x) \propto \mathrm{sinc}^2[(2\pi a/\lambda)x/z]\cos^2[(2\pi d/\lambda)x/z], \qquad (5)$$

where z is the distance between the slit and the "two-photon" detector, and x ($x = x_1 = x_2$) is the coordinate of the "two-photon" detector measured from the center of the pattern.

What happens if one replaces the two-photon source (SPDC) by a pair of **k**-vector correlated laser beams, as Bennink *et al.* did in Ref. [6]? The situation is shown in Fig. 4b,c. It is easy to see that each laser beam, independently, may produce a "classical" Fourier transform of the slit. As a consequence, on the image plane, the final image would be a "product" of the two. And since each one of them, separately, must be subject to the classical diffraction limit, the final image (obtained by joint detections) must also be subject to it. The classical simulations cannot improve the spatial resolution of an image beyond the diffraction limit. It would really be a violation of the uncertainty principle if it did.

Conclusion: quantum imaging experiments have explored the very special physics of multi-particle entanglement. The multi-particle probability amplitudes play the

fundamental role in quantum imaging. In general, they do not have a classical analogous and, consequently, cannot be simulated classically. The coherent superposition of the multi-particle amplitudes result in effects which are unacceptable by classical physics. An interesting alternative demonstration of the quantum character of entangled imaging has been recently proposed in [11]. Feynman used to consider the superposition principle as the only mystery of quantum mechanics [12]. Indeed, in an quantum entangled system, superposition takes place in a special form: it is the superposition of multi-particle amplitudes. One of the consequences of quantum superposition is the effect of sub-diffraction (or super-resolution). As Feynman pointed out in his Lectures [12] the effect of diffraction reflects the same physics contained in the uncertainty principle [3]. It follows that the uncertainty relations, as EPR [7] and Popper [8] argued in 1935, may serve as another standard, besides Bell inequality [13], for distinguishing quantum from classical physics.

The authors thank M.H. Rubin for helpful discussions. This work was supported, in part, by ONR and NSF.

[1] D.V. Strekalov, et al., Phys. Rev. Lett. **74**, 3600 (1995).
[2] T.B. Pittman, et al., Phys. Rev. A **52**, R3429 (1995).
[3] Y.-H. Kim and Y.H. Shih, Foundations of Physics **29**, 1849 (1999).
[4] M.D'Angelo, et al., Phys. Rev. Lett. **87**, 013602 (2001).
[5] A.N. Boto, et al., Phys. Rev. Lett. **85**, 2733 (2000).
[6] R.S.Bennink, et al., Phys. Rev. Lett. **89**, 113601 (2002).
[7] A. Einstein, B. Podolsky, and N. Rosen, Phys. Rev. **47**, 777 (1935).
[8] K.R. Popper, Naturwissenschaften **22**,807 (1934); K.R. Popper, "Quantum Theory and the Schism in Physics" (Hutchinson, London, 1983).
[9] D. Bohm, "Quantum Theory" (Prentice Hall, New York, 1951).
[10] D.N. Klyshko, "Photon and Nonlinear Optics" (Gordon & Breach, New York, 1988).
[11] A. Gatti, et al., quant-ph/0210109 (to appear on Phys. Rev. Lett.).
[12] R.P. Feynman, "The Feynman Lectures on Physics", Vol. III (Addison-Wesley, Reading, Massachusetts, 1965).
[13] J.S. Bell, Physics **1**, 195 (1964); "Speakable and Unapeakable in Quantum Mechanics" (Cambridge University Press, New York, 1987).