Solving Nonlinear Systems for a 2-Link Robotic Arm Using Python and Jacobian-Based Iteration

Juan R. Ortiz; Timothy Jung; Pomona, California

Abstract

This article presents a practical application of solving non-linear systems to model the dynamics of a 2-link robotic arm using Python and Jacobian-based iteration. The model is derived from the equations of motion and is validated against experimental data. This approach provides a foundation for designing control strategies for the robotic arm.

Objective

The objective of this study is to implement a numerical model that represents the motion and forces involved in the robotic arm's operation.

Method

A 2-link robotic arm consists of two segmented links connected by joints, allowing motion within a 2D plane. The dynamics of this movement can be described as a system of non-linear equations.

This can be expressed as:

$$x = L_1 \cos(\theta_1) + L_2 \cos(\theta_1 + \theta_2) - target_x$$

$$y = L_1 \sin(\theta_1) + L_2 \sin(\theta_1 + \theta_2) - target_y$$

We are trying to find the angles θ_1 and θ_2 that will allow the link end-effector to reach its target position ($target_x$, $target_y$) for $F(x) = 0$.

A scalar function is defined by Newton's method as:

$$x_{k+1} = x_k - \frac{f(x_k)}{f'(x_k)} = x_k - \Delta x$$

where Δx is the change in x that we need to apply to get closer to the solution. We can use the Jacobian matrix to relate the change:

$$J(x_k)\Delta x = -f(x_k)$$

where:

$$J(x_k) = \begin{bmatrix} \frac{\partial f_1}{\partial \theta_1} & \frac{\partial f_1}{\partial \theta_2} \\ \frac{\partial f_2}{\partial \theta_1} & \frac{\partial f_2}{\partial \theta_2} \end{bmatrix}$$

$$\frac{\partial f_1}{\partial \theta_1} = -L_1 \sin(\theta_1) - L_2 \sin(\theta_1 + \theta_2)$$

$$\frac{\partial f_2}{\partial \theta_1} = L_1 \cos(\theta_1) + L_2 \cos(\theta_1 + \theta_2)$$

$$\frac{\partial f_2}{\partial \theta_2} = L_2 \cos(\theta_1 + \theta_2)$$

$$\frac{\partial f_1}{\partial \theta_2} = -L_2 \sin(\theta_1 + \theta_2)$$

Solving this analytically can be complex, so instead our solver approximates the Jacobian and iteratively updates the angles until convergence is achieved.

In python, we can approximate the Jacobian using this code snippet:

$$J_{:,j}^{(k)} \approx \frac{f(x_k + he_j) - f(x_k)}{h}$$

```
# Build Jacobian via forward diff.
J = np.zeros((n, n), dtype=float)
for j in range(n):
    x_plus = x.copy()
    x_plus[j] += h
    F_plus = np.asarray(F(x_plus),
              dtype=float).reshape(-1)
    if F_plus.size != n:
        raise ValueError(
            f"F(x) must return a vector
              of length {n}, got
              {F_plus.size}"
        )
    J[:, j] = (F_plus - Fx) / h
```

The solver iteratively builds the Jacobian through finite forward differences. No we can solve the Newton step using a linear solver.

$$J(x^{(k)})\delta^{(k)} = -F(x^{(k)})$$

```
delta, err = self.solve_lsoe(J, -Fx)
```

Figure 1: The core idea is to use the Jacobian matrix, which relates the changes in joint angles to the end-effector's position.

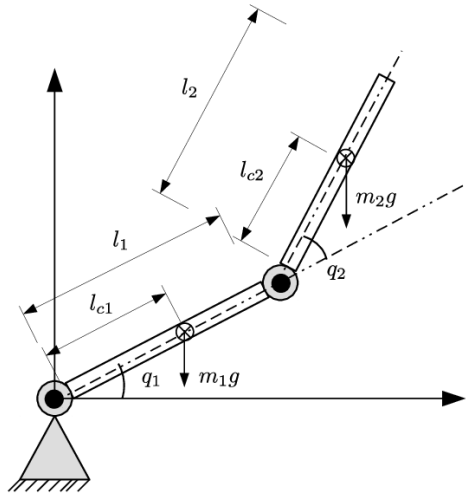

Figure 1. *Example of a 2-link kinematic system.*

Now we can update each step:

$$x^{(k+1)} = x^{(k)} + \delta^{(k)}$$

```
x = x + delta
```

This process is repeated until the solution converges, meaning that the end-effector reaches the target position within the specified tolerance.

Result

In Figure 2 the plot represents the joint angles θ_1 and θ_2 as they evolve over iterations of the solver. The trajectory shows how the angles adjust to minimize the error between the end-effector's position and the target position, ultimately converging to a solution that allows the robotic arm to reach its desired location.

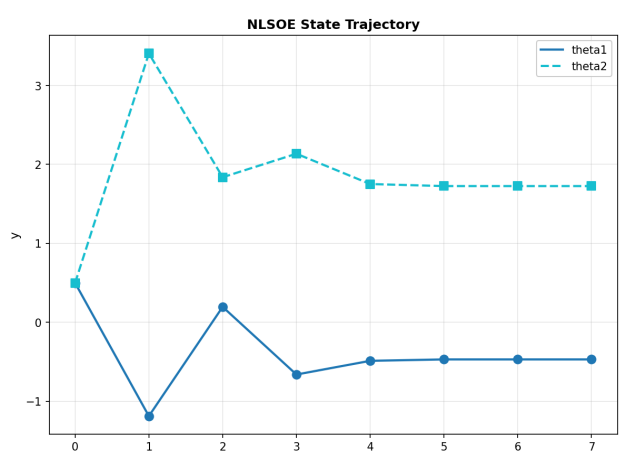

Figure 2. *The state trajectory of the 2-link robotic arm as it converges to the target position.*

In Figure 3 the plot represents the convergence behavior of the iterative solver. The graph shows the reduction in the error as the iterations progress, indicating that the solution is approaching the target position.

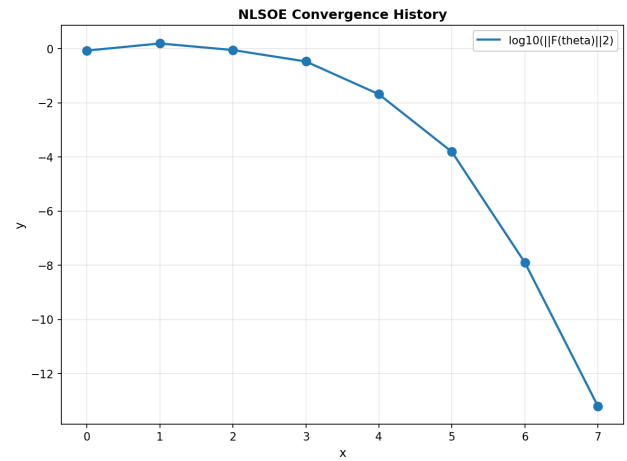

Figure 3. *The convergence of the 2-link robotic arm as it reaches the target position.*

The results demonstrate that the Jacobian-based iteration method effectively solves the nonlinear system of equations of the 2-line robotic arm.

From the results we can conclude that this method converges fast, but could also diverge if the initial guess is not close enough to the solution. Also the implementation of forward differences is simple but can be less accurate than other methods of approximating a Jacobian, such as central differences or automatic differentiation.

Overall Document Guidelines: Head

Clear document of any fonts other than Times, Arial, and Symbol. The paper should be formatted using the tags provided in the template, i.e., title, author, section, subsection, subsubsection, eq./fig., references, etc. in a 2 column format on US letter size paper (8.5×11 inches, or 21.6×27.9 cm).

The left and right margins are set automatically to .75 inch (1.90 cm), and the top and bottom margins to 1.0 inch (2.54 cm). The document is in a 2-column format with column widths set at 3.38 inch (8.57 cm) and the gutter -the space between columns- at .25 inch (0.635 cm).

Papers should be a maximum of 4-6 pages; longer papers will be returned for revision. Please do not place folios or page numbers in your paper. That information is inserted when we assemble the book.

Graphics and Equations

Graphics and equations should fit within one column (3.38 inches wide), but full width (7 inch) figures are also acceptable. Equations, figures and figure captions each have their own style tags. Equations are numbered using parentheses flushed right as shown below.

$$\text{IS\&T} + \text{members} \times \text{Confs.} = \text{Success} \tag{1}$$

Helpful Hints and Style Tags: Subhead

For a complete listing of the style tags for use in this template refer to Table 1. These are the style tags for conference proceedings; if you use the wrong template/style tags your paper will be sent back to you to be reformatted. All of these forms and templates related to the publication of conference papers are available at

www.imaging.org/conferences/guidelines.cfm.

Select the specific conference and download the Authors Kit. The template may vary from one conference to another.

The template is set up for MS Word and LaTeX. Please check the paper carefully to confirm that the styles have been applied correctly, then print it out and double check to ensure that the paper appears as intended.

Submitting Your Paper

The submission of your paper has to be performed through the IS&T submission website. Authors receive a login for this site by e-mail. Papers can be submitted in Postscript, Word, or WordPerfect format, and will be converted to PDF by the submission server. Please carefully review the generated PDF and verify that all the text, equations, figures and tables are displayed correctly before approving its submission.

Margins in LaTeX

Because of the differences between dvips conversion utilities, the margins of your generated PDF document might vary. Please print your document, and verify its margins. If they are incorrect, please adapt the sizes of the margins in the file *ist.sty*. Typically the top margin should be decreased.

Please contact IS&T with any questions or requests for assistance in helping prepare the paper. We look forward to having your paper presented at the conference and published in the conference proceedings.

Style Tag Table: Table head

1. Title	title environment
2. Byline: Author/Affiliation	author environment
3. Head	section environment
4. Subhead	subsection environment
5. Tertiary head	subsubsection environment
6. Abstract	abstract environment
7. Body	regular text
8. Equation	equation environment
9.1 Figure	align left
9.2 Figure caption	caption environment
10.1 Table head	caption environment
10.2 Table text	tabular environment
11. References	bibliography + command *small* to have a 1pt smaller font
12. Author Bio text	biography environment
13.1 List, bullet	itemize environment
13.2 List, numbered	enumerate environment

Document Specs: Table head

Paper Size	US Letter
Left/right margin	.75 inch (1.90 cm)
Top/bottom margin	1 inch (2.54 cm)
Columns	2 at 3.38 inch (8.57 cm) wide. Spacing between columns: 0.25 inch (0.635 cm)

Reference Preparation

Use the standard LaTeX *cite* command for references in the text. You can then use the standard bibliography command to generate the list of references. Add the command *small* before

Figure 4. *IS&T logo.*

Figure 5. *IS&T logo.*

the bibliography to give it the right font size. Reference [1] style should be used for books, Reference [2] style should be used for Journals, and Reference [3] style should be used for Proceedings.

References

[1] John Doe, Recent Progress in Digital Halftoning II, IS&T, Springfield, VA, 1999, pg. 173.

[2] John Doe, Digital Imaging, J. Imaging. Sci. and Technol., 42, 112 (1998).

[3] John Doe, An Inexpensive Micro-Goniophotometry You Can Build, Proc. PICS, pg. 179. (1998).

Author Biography

Please submit a brief biographical sketch of no more than 75 words. Include relevant professional and educational information as shown in the example below.

Jane Doe received her BS in physics from the University of Nevada (1977) and her PhD in applied physics from Columbia University (1983). Since then she has worked in the Research and Technology Division at Xerox in Webster, NY. Her work has focused on the development of toner adhesion and transport issues. She is on the Board of IS&T and a member of APS and SPIE.