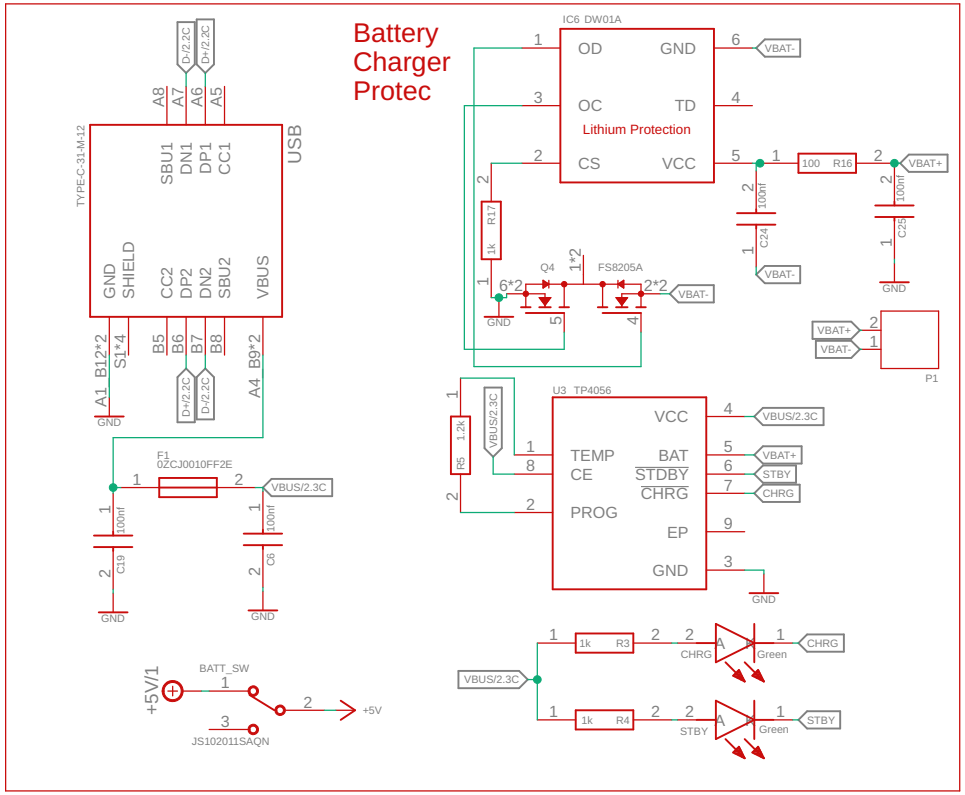

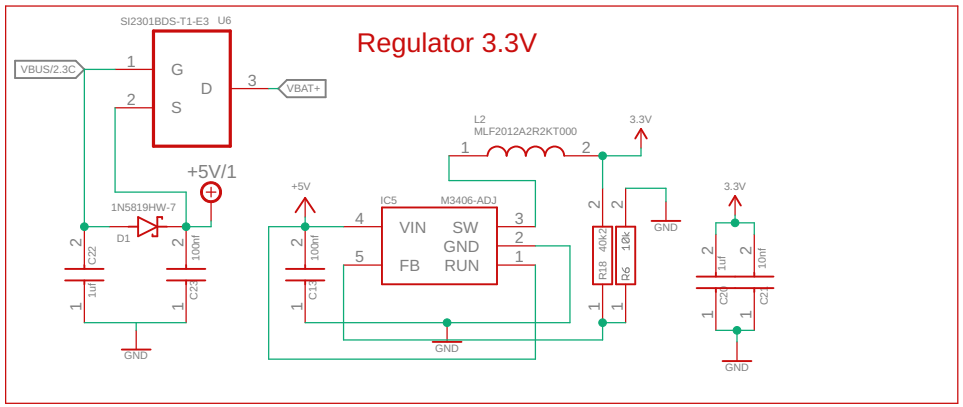

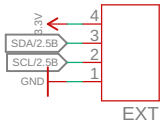

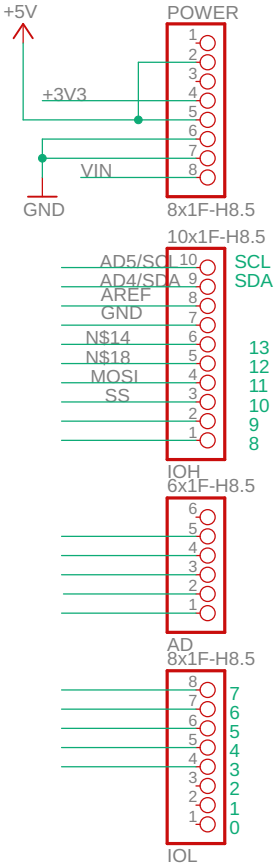

arduino_Uno_Rev3-02-TH

18/6/2024 4:01 pm

Sheet: 1/2

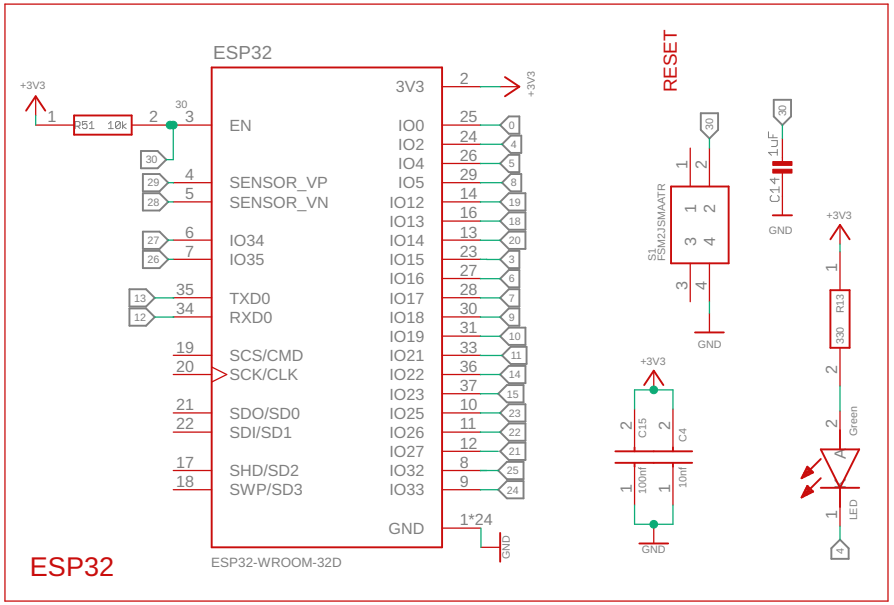

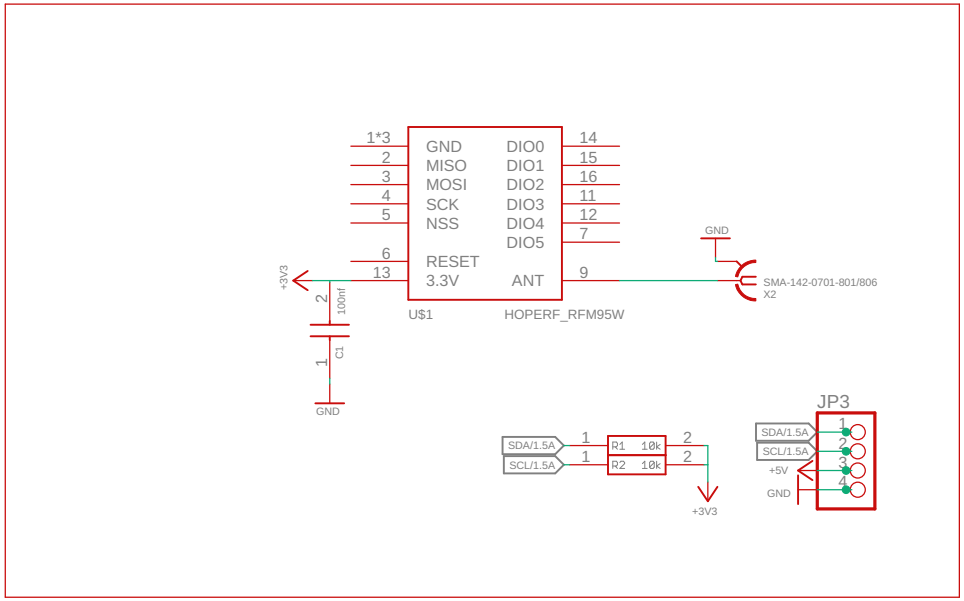

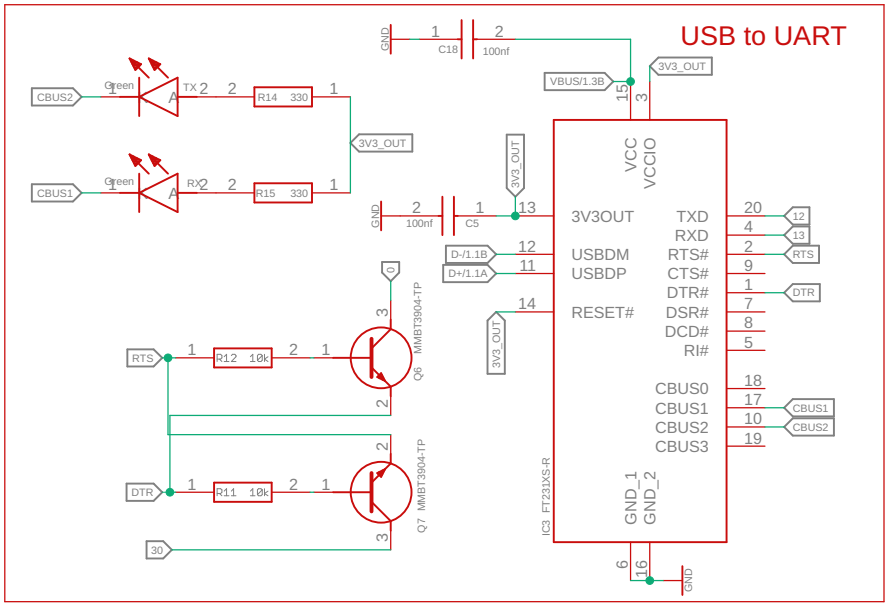

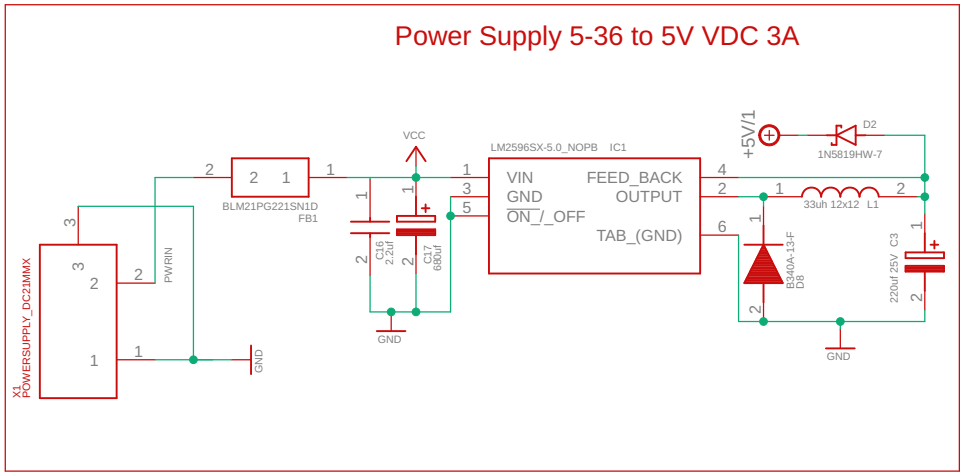

ESP and USB	juarendra Ramadhani
	arduino_Uno_Rev3-02-TH
	18/6/2024 4:01 pm
	Sheet: 2/2