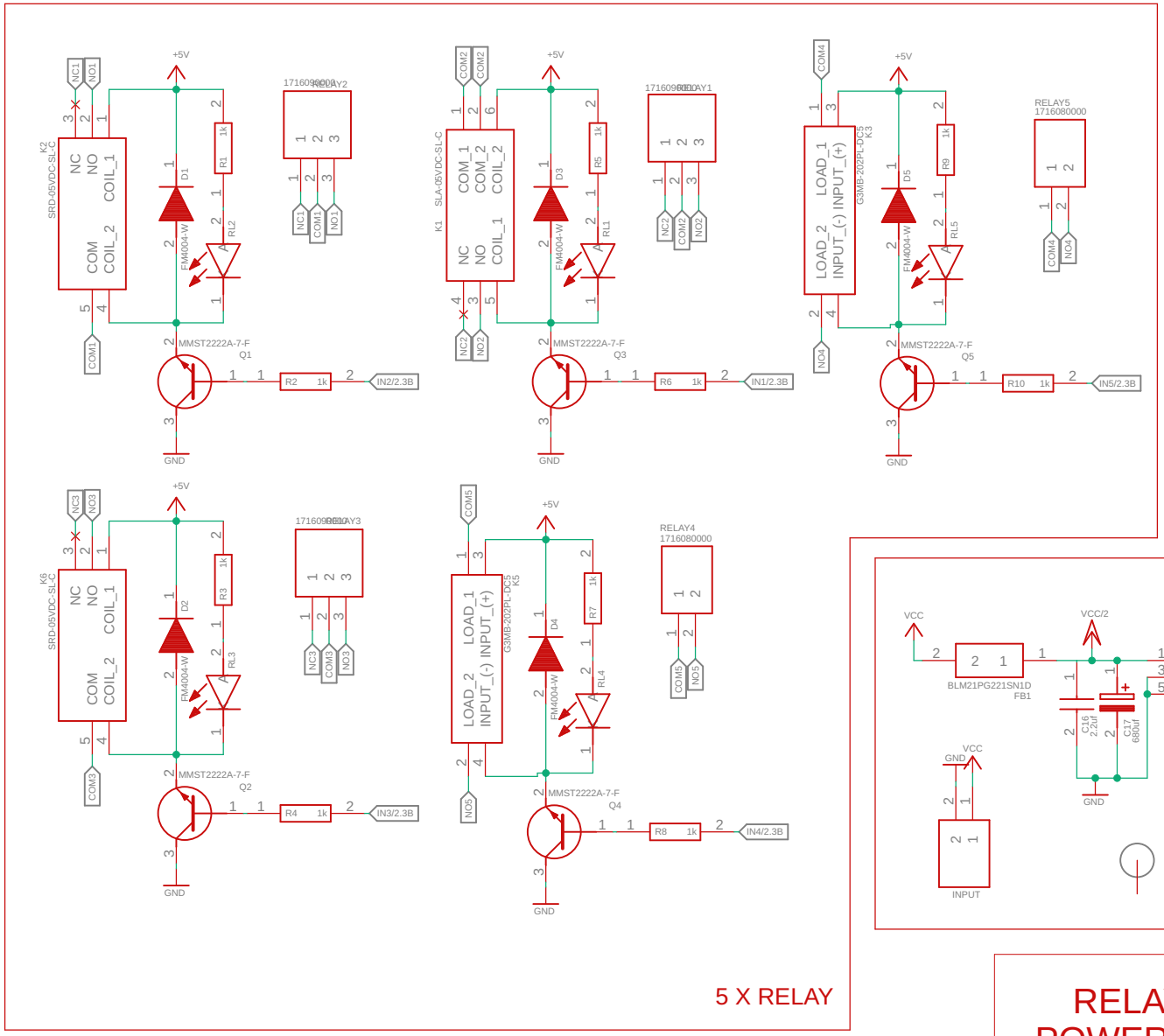

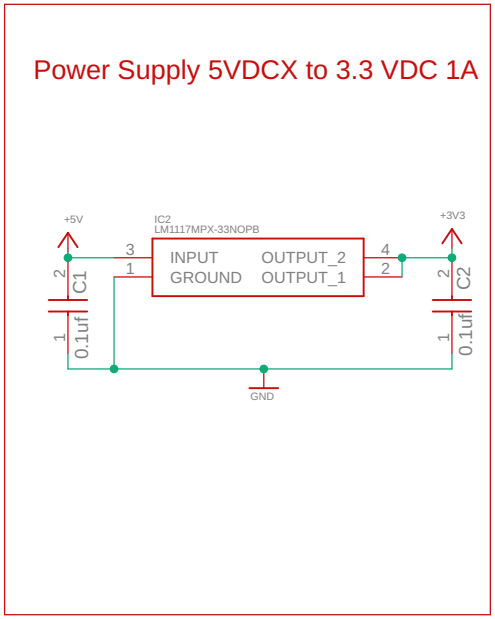

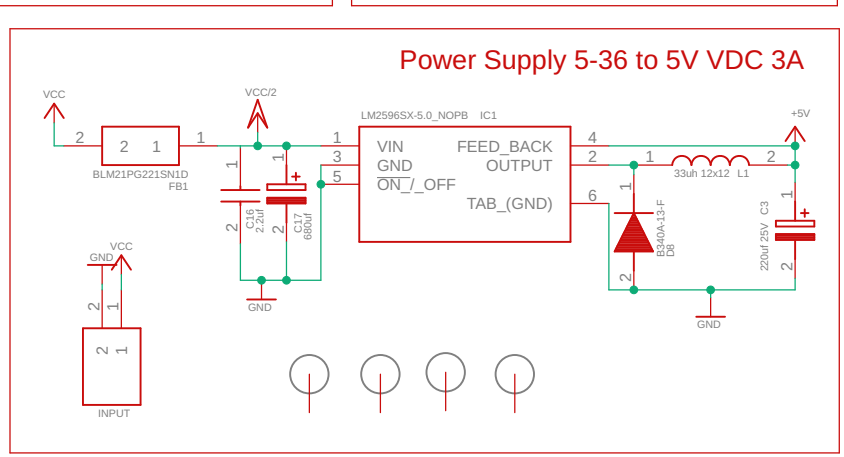

RELAY AND POWER SUPPLY

JUARENDRA R.	
shieldRelayV2	
18/6/2024 10:39 am	
Sheet: 1/3	

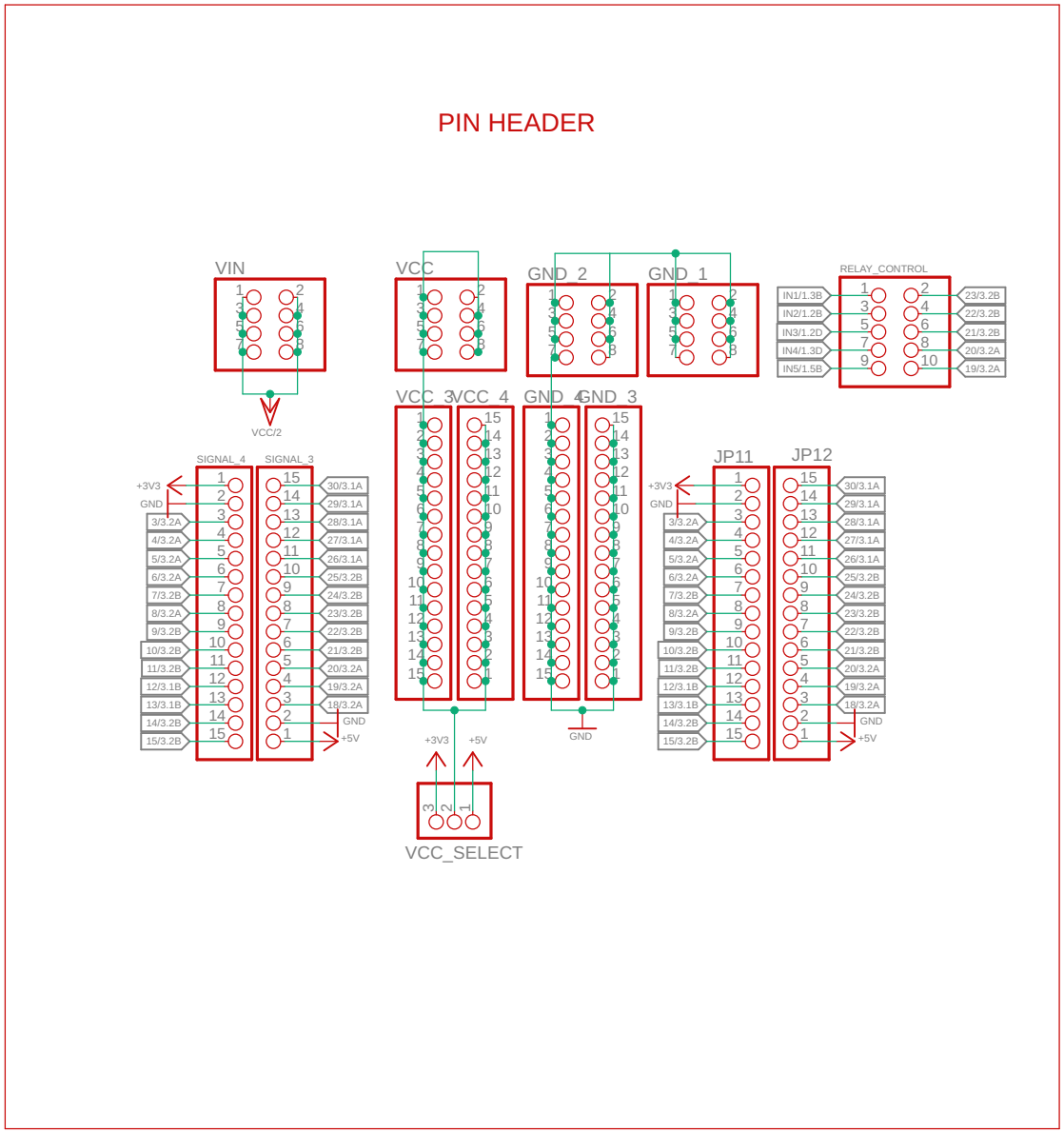

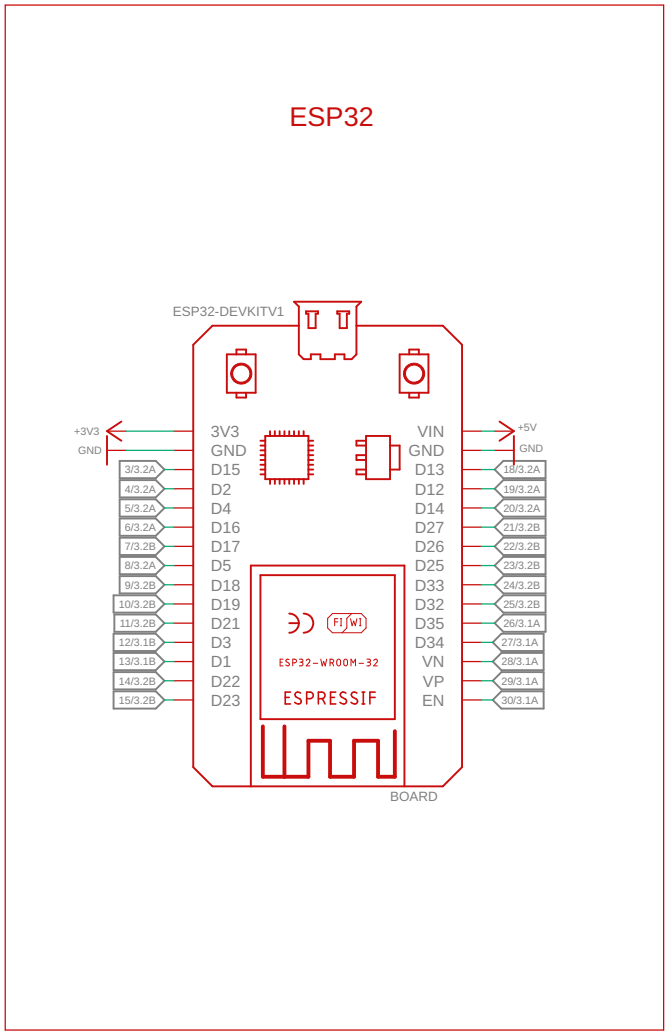

PIN HEADER	JUARENDRA R.
	shieldRelayV2
	18/6/2024 10:39 am
	Sheet: 2/3

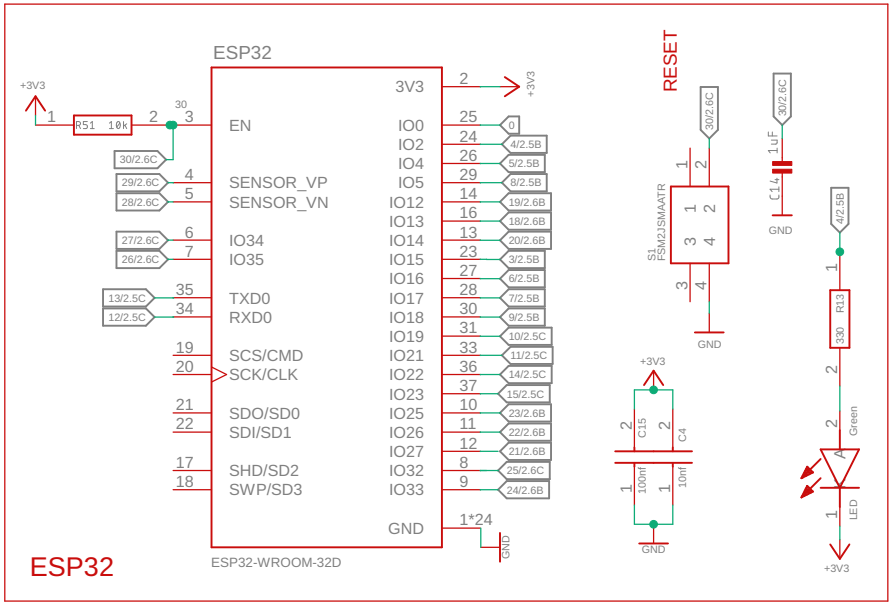

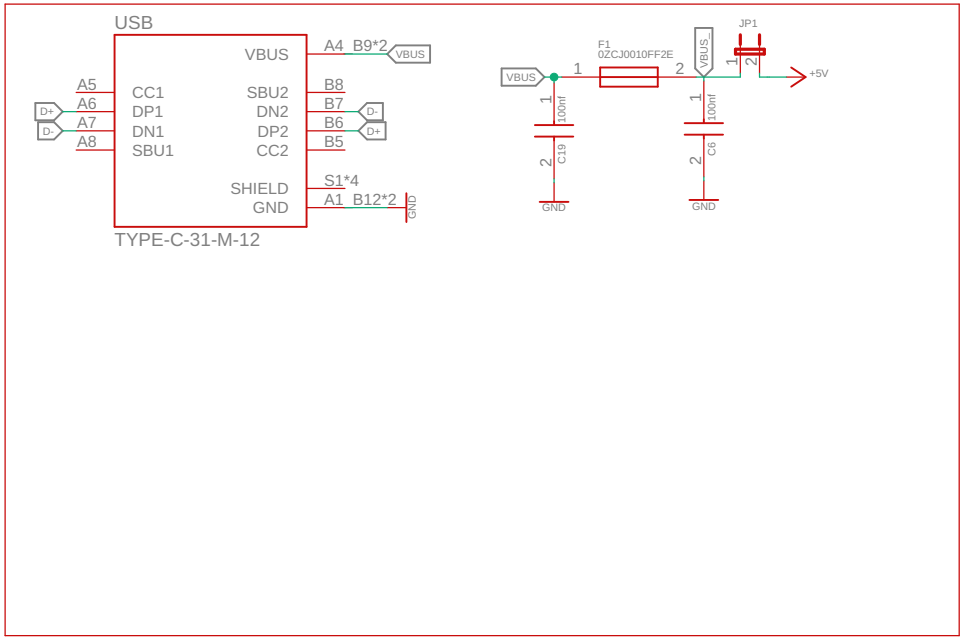

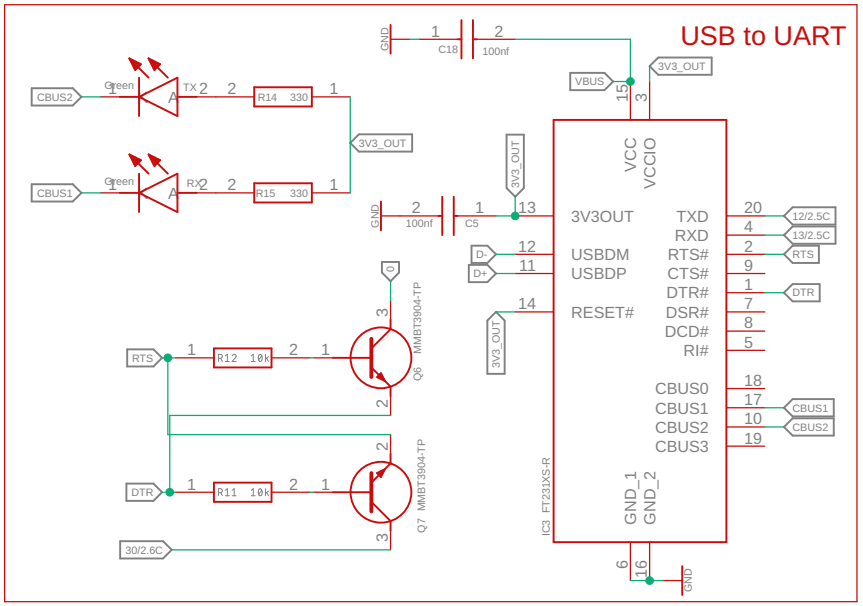

ESP and USB	juarendra Ramadhani
	shieldRelayV2
	18/6/2024 10:39 am
	Sheet: 3/3