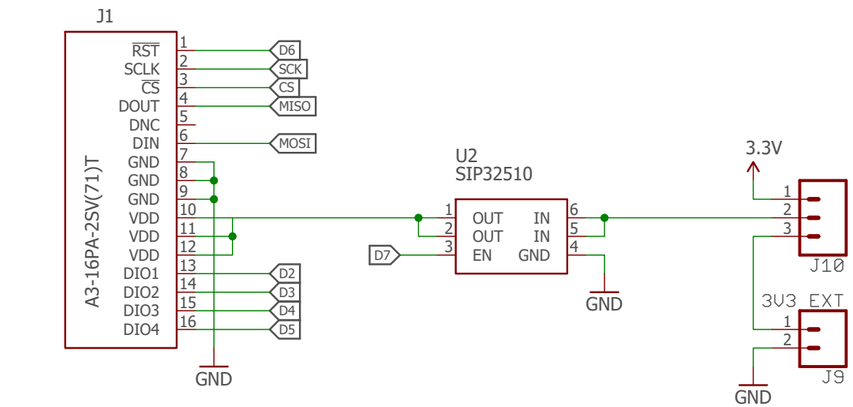

Teensy 3.1/3.2/LC Connectors

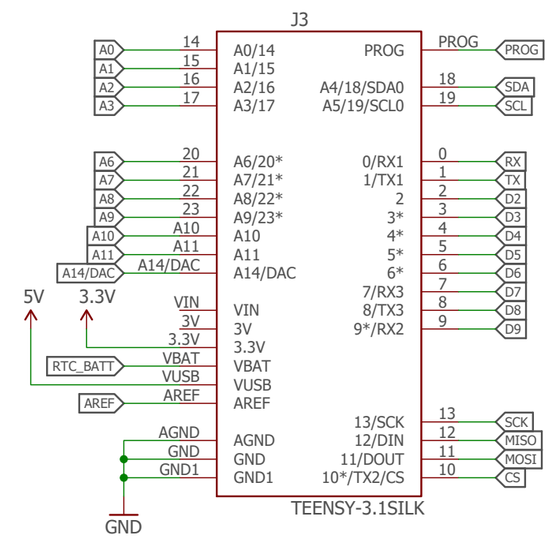

Arduino Footprint Connections

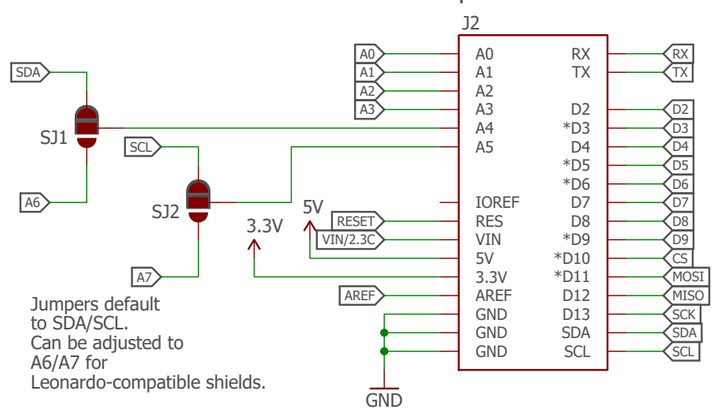

SPI Header

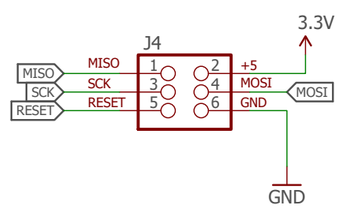

Analog Breakouts

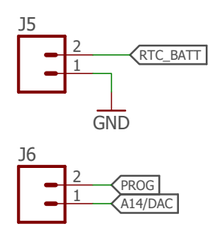

Project:	ADIS_Teensy_Arduino Breakout RevC
Author:	Juan Jose Chong
REV:	
Date: 12/13/2017 1:14 AM	Sheet: 1/2