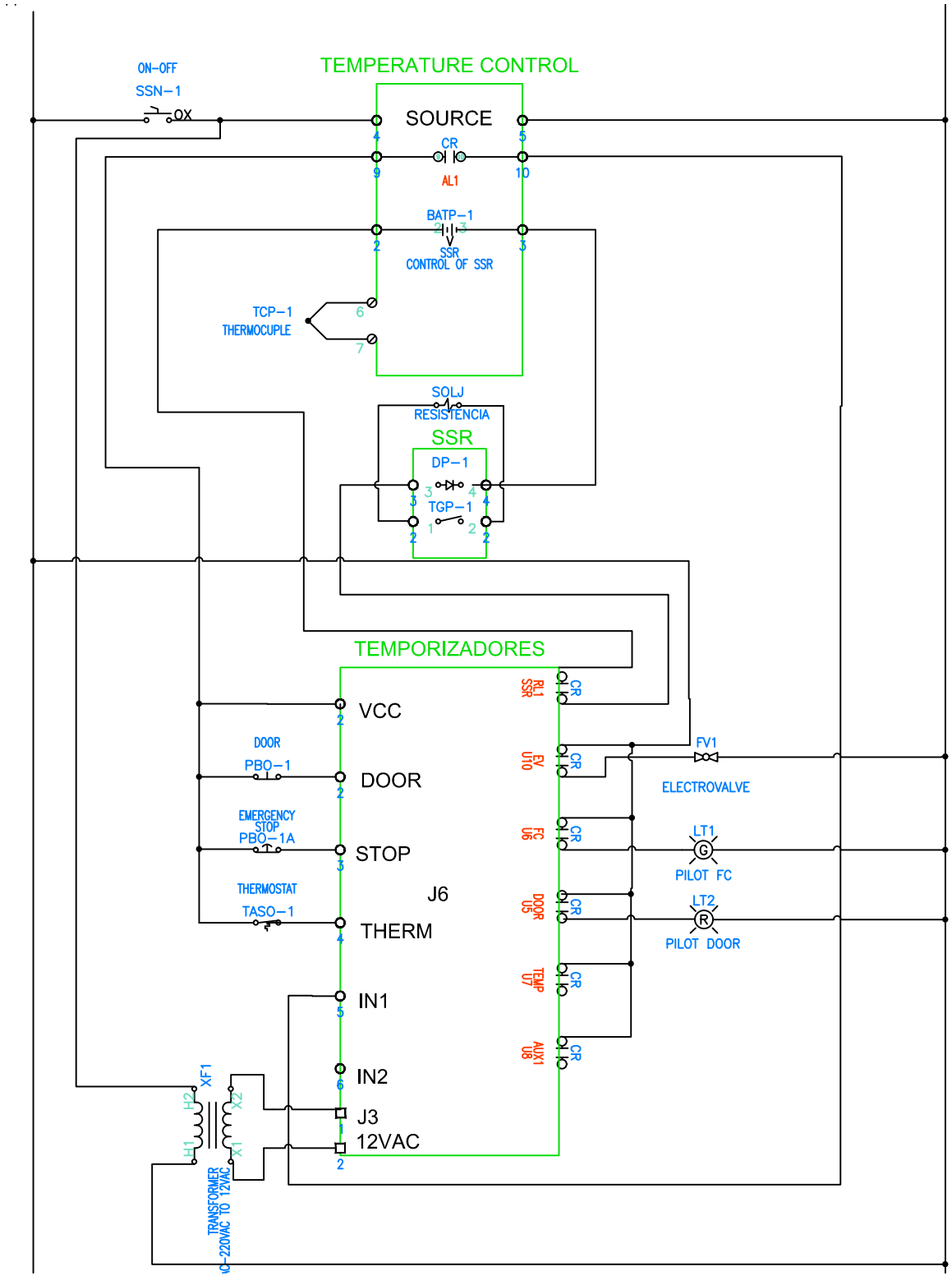
TEMPERATURE CONTROL
ON-OFF
SSN-1
SOURCE
CR
AL1
BATP-1
SSR
CONTROL OF SSR
TCP-1
THERMOCUPLE
SOLJ
RESISTENCIA
SSR
DP-1
TGP-1
TEMPORIZADORES
VCC
DOOR
PBO-1
DOOR
EMERGENCY STOP
PBO-1A
STOP
THERMOSTAT
TASO-1
THERM
J6
IN1
IN2
J3
12VAC
RL1 SSR
EV U10
FC U6
DOOR U5
TEMP U7
AUX1 U8
FV1
ELECTROVALVE
LT1
PILOT FC
LT2
PILOT DOOR
XF1
TRANSFORMER
AC-220VAC TO 12VAC