PETRI
REPAIR MANUAL
7S

PETRI CAMERA COMPANY, INC.

CONTENTS

SECTION I : TROUBLE AND REPAIR 1

WINDING 1

REWINDING 1

SHUTTER 1

DIAPHRAGM 3

SELFTIMER 3

SYNCHRONIZATION 3

MATER 4

COUNTER 4

RANGE-FINDER 5

SECTION II : ADJUSTMENT 6

1. Adjustment of Amount of Winding and Wind gear pawl (70) 6

1-1. Adjustment of Wind gear pawl

1-2. Adjustment of Amount of Winding

1-3. Checking of Stopper Position

1-4. Adjustment of Surplus amount of Winding of Cocking lever (226)

1-5. Adjustment of Shutter set bar (78)

2. Adjustment of Slow speed escapement (207) 7

3. Adjustment of Selftimer gear (180) 7

4. Adjustment of Shutter speed 8

5. Adjustment of MX delay action gear (185) and MX fly wheel (184) .. 8

6. Adjustment of Synchronization contact 8

6-1. Adjustment of X contact

6-2. Adjustment of M contact

7. Adjustment of Counter 9

8. Adjustment of Range-finder 9

SECTION III : FINAL INSPECTION 11

ATTACHMENT : TABLE OF PARTICULAR TOOLS 13

SECTION I : TROUBLE AND REPAIR

TROUBLE	CAUSE	REPAIR
WINDING		
Impossible to wind	1. Stopper (74) is deformed.	Replace it.
	2. Stopper (74) does not work well.	Referring to 1-3 of SECTION II, adjust it.
	3. Shutter set bar (78) does not work well.	Referring to 1-5 of SECTION II, adjust it.
	4. Stopper spring (79) is off.	Correct the figure so that it may not come off.
	5. Shutter set bar (78) is bent.	Adjust the bend or replace it.
	6. Wind gear pawl (70) is out of place.	Referring to 1-1 of SECTION II, adjust the position right.
	7. Shutter set bar (78) and Shutter set ring (132) are deformed because of the shutter being broken.	Refer to SHUTTER "Shutter cannot be set" of SECTION I.
Wind lever does not return smoothly.	1. Wind lever (57) is bent, hitting Slot cover base (52) or Body (110).	Adjust the bend or replace it.
	2. Lever return spring (55) is off.	Adjust the tip of Lever return spring and fix it right.
Shutter cannot be released unless Wind lever is wound twice.	1. Drive pin screw (54) is loose.	Referring to 1-2 of SECTION II, tighten it.
Wind lever can be wound twice.	1. Stopper spring (79) is off.	Adjust the tip of Stopper spring.
	2. Stopper (74) does not work well.	i. If Stopper is deformed, replace it. ii. If Stopper hits Body (110), scrape the side of Stopper.
Film cannot be transported.	1. Sprockets (41) race.	i. Take out Drive shaft (44) and clean it. ii. When Rewind button does not work well, take it out and ream the hole of Bottom cover (2).
REWINDING		
Heavy in rewinding film	1. Rewind knob (3) does not work smoothly.	i. Take out Rewind knob and put glove oil on Rewind shaft (50) and Spool bearing (48).
SHUTTER		
Shutter cannot be set.	1. Shutter set bar (78) and Shutter set ring (132) are bent.	Adjust the bend or replace them. Note: The trouble is mainly due to the defect of shutter; as Cocking & drive lever (206) is inoperative, winding is done forcibly, resulting in the bend, so check the shutter.

TROUBLE	CAUSE	REPAIR
	2. Cocking lever (226) is slipped out of place because of looseness of Cocking lever screw (225).	Get rid of looseness between Cocking & drive lever (206) and Cocking lever, and tighten Cocking lever. Use locking paint (synthetic resin).
	3. Shutter release ring (130) does not work properly, so that it continues pushing Release bar (194).	Smooth the surface of Shutter release ring or replace it.
	4. Release arm does not work smoothly so that Shutter button does not return.	Adjust it.
	5. Release bar (194) does not return smoothly.	Clean it.
	6. Drive ring stopper (183) does not work smoothly.	Adjust the parallel between Dirve ring stopper and Gear base (182) so that Drive ring stopper may work smoothly.
	7. Spring of Cocking & drive lever (206) is off.	Adjust the figure of the spring or replace it.
	8. Drive ring stopper (183) wears out, so that Shutter drive ring (220) cannot hook.	Replace Drive ring stopper.
Shutter cannot be released.	1. Mechanism of MX fly wheel (184), MX delay action gear (185) and Sector gear (189) does not work well.	Referring to 5 of SECTION II, take out each gear, wash, and put glove oil on.
	2. Biting of MX fly wheel (184), MX delay action gear (185) and Sector gear (189) is not good.	Referring to 5 of SECTION II, adjust the bend of each axis of Gear base (182) or replace it.
	3. The sliding part of Drive ring stopper (183) and Shutter drive ring (220) does not move well.	Polish the part with oil stone. Put MOS2 grease on it.
	4. MX switch lever working wrong, M contact (199) hits MX delay action gear (185), so that mechanism of MX fly wheel (184), MX delay action gear and Sector gear (189) does not work.	Adjust the figure of MX switch ring spring (213).
	5. Selftimer gear stops halfway, so that Shutter drive ring (220) does not work.	Wash Selftimer gear with mixed abluent (benzine=10 and glove oil=1). Do not put oil on the axis.
	6. Slow speed escapement (207) does not work well.	Wash it with benzine and put one drop of glove oil on the axis with an oiler.
	7. Ankle of Slow speed escapement (207) does not bite the axis of Gear base (182).	Referring to 2-1 of SECTION II, adjust it.
	8. Shutter drive ring (220) does not work well.	Adjust the balance of Shutter drive ring.
	9. The pin of Shutter drive ring (220) is bent, hitting Selftimer lever.	Bend the pin at right angles.

TROUBLE	CAUSE	REPAIR
Shutter blades do not close.	1. Slow speed escapement (207) does not work well.	Refer to SHUTTER "Shutter cannot be released" of SECTION I.
	2. Cocking & drive lever (206) does not slide Bulb lever (201) smoothly.	Polish the side of Cocking & drive lever with oil stone and put MOS2 grease on it.
	3. Bulb lever (201) does not slide the pin of Release bar (194) smoothly.	Polish the side of Bulb lever and put MOS2 grease on it.
	4. Oil sticks to Shutter blade (219).	Take out Shutter case (211) and wash Shutter blade with benzine, and also clean the oil stuck to Mount base assembly (197), Diaphragm covering disc (217), and Shutter case (211).
DIAPHRAGM		
Diaphragm blades do not work well.	1. The pin of Diaphragm blade (216) is off.	Take out Shutter case (211), Diaphragm covering disc (217), and Diaphragm disc (214) and replace Diaphragm blade.
	2. Oil sticks to Diaphragm blade.	Wash Diaphragm blade with benzine and clean the oil stuck to Shutter case (211), Diaphragm covering disc (217), and Diaphragm disc (214).
	3. Set screw of Diaphragm drive ring (224) is loose.	Tighten it and put locking paint (synthetic resin) on it.
	4. Diaphragm drive ring is deformed.	Adjust the balance of it.
SELFTIMER		
Selftimer does not operate.	1. Selftimer gear (180) does not come off the lever of Gear base (182).	Referring to 3-1 of SECTION II, adjust it.
	2. Selftimer gear (180) does not work well.	Same as above
	3. Ankle holding spring hits Selftimer spring (181).	Same as above
SYNCHRONIZATION		
Flash does not fire.	1. Lead wire is off, or M or X contact does not work well.	i. Solder the lead wire. ii. Clean X,M contact with benzine. iii. If X,M contact gets corrosive, replace it.
Flash does not synchronize.	1. Contact time of X,M contact gets out of order.	Refer to 6 of SECTION II.
Flash blows out.	1. Cover of lead wire peels off and insulation becomes ineffective.	Replace the lead wire.
	2. Synchro-plug does not insulate.	Clean the plug or replace the plug and Insulation washer.
	3. X,M contact do not insulate.	When X,M contact touches the other part, refer to 6 of SECTION II, or replace Insulation washer.

TROUBLE	CAUSE	REPAIR
METER		
Meter needle jumps.	1. Resistance inside ASA ring (164) gets dirty or its carbon strip is uneven.	i. Clean dirty spots with dry cloth. ii. If the carbon strip wears out, replace Resistance.
	2. Fixed brush w/insulator (160) or Moving brush (170) is deformed, so that it does not contact ASA ring (164) well.	Adjust the figure of Fixed brush w/insulator or Moving brush so that its spring tention against ASA ring may be strong enough.
	3. Connector (178) does not contact Connector ring (133) completely.	Clean them and let them contact each other properly.
Meter needle sticks.	1. Meter needle and Stopper (Insulator) get dirty.	Clean Meter needle and Stopper with thinner or change the position where Stopper touches.
	2. Pivot is too tight or loose.	Adjust looseness to be 0.04±0.01. Note: Tighten the pivot and the moment before Meter needle stops it should be regarded as looseness being zero and loosen the pivot 60°. This is a proper looseness.
Meter needle is bent.	1. Red celluloid needle is bent owing to temperature or humidity.	Replace it with the present Meter which has phosphor bronze needle.
Meter needle stops.	1. Wire is cut inside Meter.	Take out Meter and check the induction between Black lead wire and Meter cover by tester; when Meter shows ∞, replace Meter and in case of 0, pull out the wire as it short-circuits and put on vinyl tube for reuse.
	2. Fixed brush w/insulator (160) contacts ASA ring.	Correct the bend of Fixed brush w/insulator.
	3. Connector ring (133) does not contact Connector (178).	Same adjustment as METER: "Meter needle jumps." of SECTION I
	4. The soldered part of Lead wire is off.	Solder it again.
Meter is out of balance.	1. Balance of weight moves out or comes off.	Replace it.
	2. Pivot is loose.	Same adjustment as METER: "Meter needle jumps." of SECTION I
COUNTER		
Counter does not advance.	1. Advance pawl does not get in the first gear.	Refer to 7 of SECTION II.
	2. Momentum of advance pawl pin is small.	Same as above
	3. Advance pawl does not bite deep enough.	Same as above
	4. Counter ratchet spring (27) is off.	Same as above
	5. Counter pawl (24) does not bite deep enough.	Same as above

TROUBLE	CAUSE	REPAIR
Counter does not return.	1. Counter shaft pin does not work well.	Refer to 7 of SECTION 11.
	2. Counter shaft pin touches Body cover.	Same as above
	3. Counter gear spring is off or coils round.	Same as above
	4. Counter pawl (24) bites too deep.	Same as above
RANGE-FINDER		
∞ is out of focus.	1. Small mirror of Rangefinder frame (80) or Reflex mirror (93) is off.	Clean the binding part and bind with mixed binding agent of Bond E2 and C1 (7:3).
	2. Cam follower (85) does not work well.	Take it out and clean it.
	3. The angle of Small mirror is wrong.	Referring to 8 of SECTION II, adjust it by collimator.
Near distance is out of focus.	1. Same as above	Same as above
Vertical discord of moving image	1. Same as above	Same as above

SECTION II : ADJUSTMENT

1. Adjustment of Amount of Winding and Wind gear pawl (70)

Note: Wind Wind lever (57) while holding down Sprockets (41) with left hand thumb giving load not less than when film is loaded.

Fig. 1

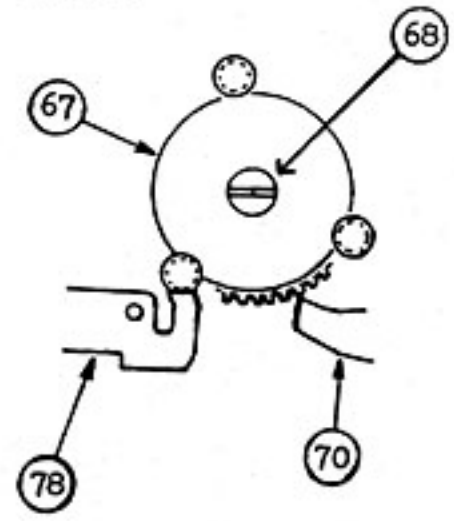

1-1. Adjustment of Wind gear pawl

The moment before Shutter set bar (78) is going to come off the pin of Shutter set and wind gear (67) adjust Eccentric washer (72) so that the tip of Wind gear pawl (70) may be placed at the teeth front of Shutter set and wind gear. (Fig. 1)

When Shutter set bar came off Shutter set and wind gear and is 0.1 - 0.15 mm apart from Shutter set and wind gear shown in Fig. 2, the tip of Wind gear pawl gets in between the teeth of Shutter set and wind gear. (Fig. 3)

Fig. 2

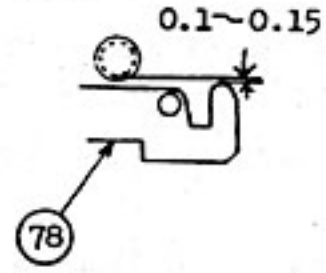

Fig. 3

1-2. Adjustment of Amount of Winding

Wind lever should have further winding space of 0.1 - 0.15 mm from the position of Fig. 3. This adjustment is done by tightening Drive pin screw (54). Put locking paint (synthetic resin). (Fig. 4)

Fig. 4

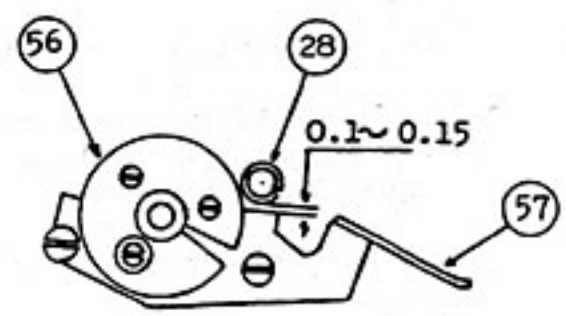

1-3. Checking of Stopper Position

When Wind lever is advanced fully, there should be a space not more than 0.2 mm between Stopper (74) and Shutter set and wind gear (67) but they should not touch each other. (Fig. 5)

Fig. 5

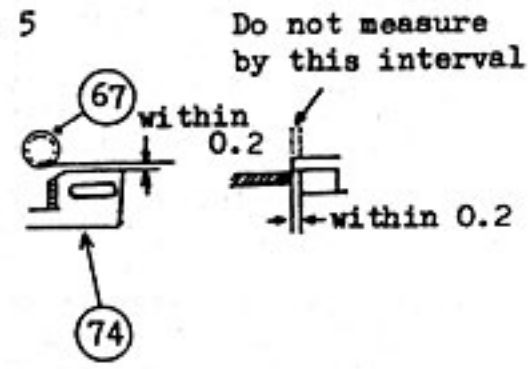

1-4. Adjustment of Surplus amount of Winding of Cocking lever (226)

Advance Wind lever to set the shutter (not pressing Shutter button), disconnect Stopper (74) with finger, move Shutter set bar (78) as far as Set ring touches Cocking lever, then wind Wind lever so that Shutter set bar further may move 0.3 - 0.6 mm. This adjustment should be done by bending * part of Shutter set bar. (Fig. 6)

Fig. 6

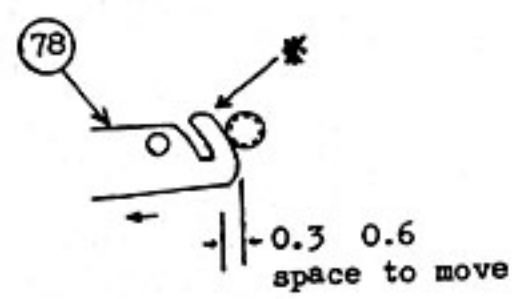

1-5. Adjustment of Shutter set bar (78)

Adjust Shutter set bar holder so that Shutter set bar may not move by its weight when slanting the camera body but should move smoothly when Shutter set bar spring (76) hooks Shutter set bar. Vertical play should be held to a minimum. Put MOS2 grease on the sliding part of Shutter set bar and its holder. (Fig. 7)

Fig. 7

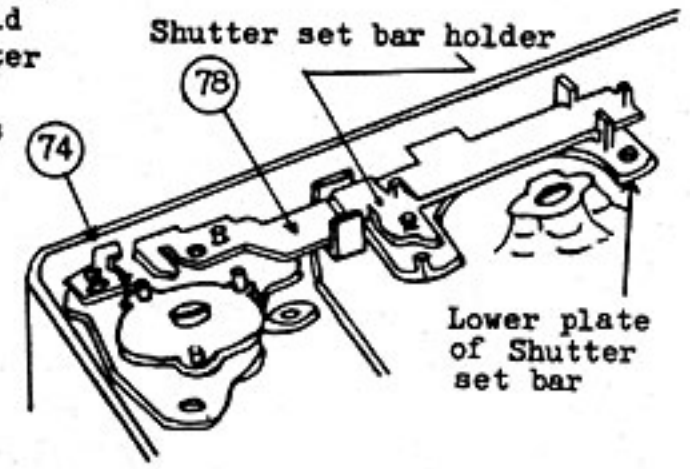

2. Adjustment of Slow speed escapement (207)
Adjustment of One second and Clutch

2-1. Adjust the pin of Shutter drive ring (220) so that it may make a right angle with Shutter drive ring.

2-2. Insert Shutter speed cam (165) and check that there should be no space between Ankle base post and Shutter speed cam. (Fig. 8)

2-3. Adjust the pin of Shutter drive ring and the foot of Escapement gear base so that there may be no play of Escapement ankle. (Fig. 9)

2-4. Upon checking the biting of Escapement ankle adjust the speed of one second.

2-5. Check that Clutch pin does not touch Shutter speed cam at 1/125 sec.

2-6. Check the movement of Slow speed escapement (207).

Fig. 8

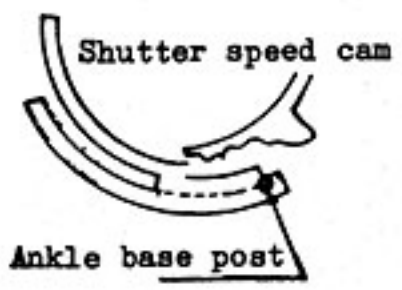

Fig. 9

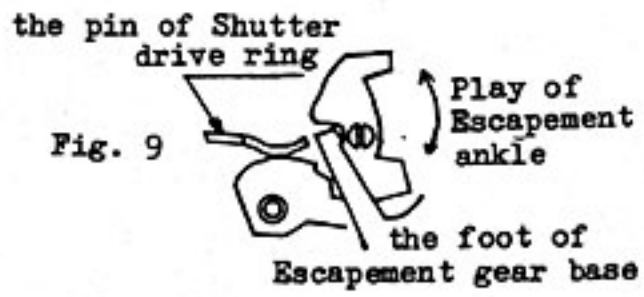

3. Adjustment of Selftimer gear (180)

3-1. Check that Selftimer does not start because of the shock caused by Pendulum stopper hitting Selftimer spring (181) when Selftimer lever is set.

3-2. Before Selftimer lever is set give 0.6 mm space between Pendulum stopper and Selftimer spring. (Fig. 10)

3-3. Check the space between the pin of Shutter drive ring (220) and Sector gear of Selftimer (180).

3-4. Selftimer lever should be set at any given place within the operative range of 0° - 70°.

3-5. When Selftimer lever is set fully (70°), the operating time should be 7 to 11 sec.

3-6. Time when Selftimer is released is the same as MX fly wheel (184) starts or the former is released a little. This adjustment should be made by bending the hook of Selftimer. (Fig. 11)

Fig. 10

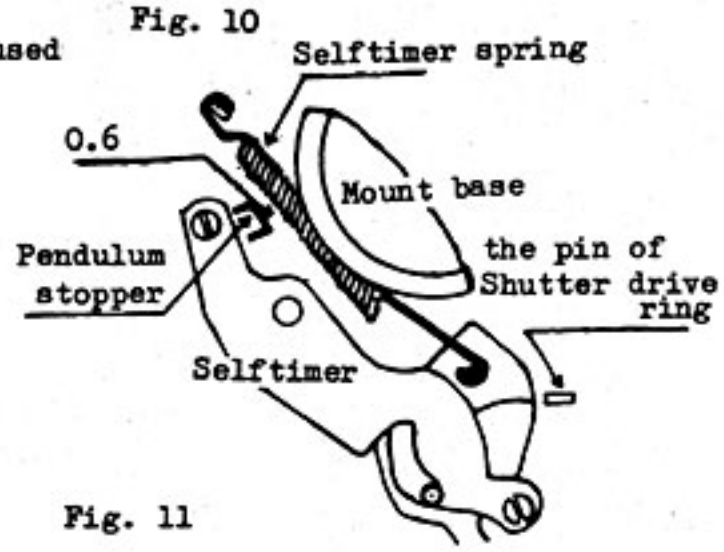

Fig. 11

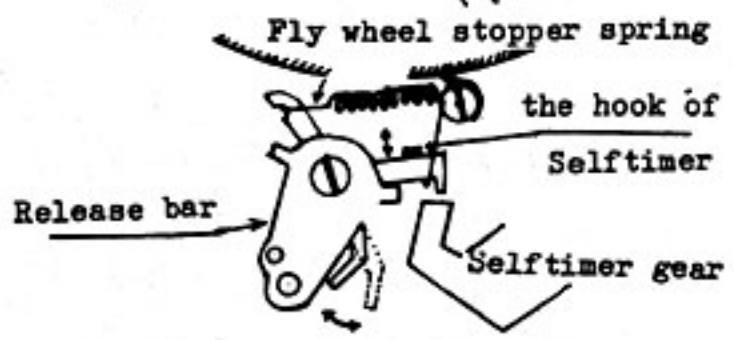

4. Adjustment of Shutter speed

4-1. Measure the shutter speed always with aperture being fully open.

4-2. Pay special attention to the speeds of 1/8 and 1/125 sec. if they are irregular or not.

4-3. When the speed is slow, strike Shutter speed cam (165) with punch; when the speed is fast, scrape it with file.

Note: Clean the metal chips and scraps of Shutter speed cam to prevent them from getting inside.

5. Adjustment of MX delay action gear (185) and MX fly wheel (184)

5-1. Put glove oil around the axis of Gear base (182).

5-2. Insert MX fly wheel (184) into the axis of Gear base (182). Pull Release bar (194) and set the angle of Release bar at the cam of MX fly wheel. (Fig. 12)

5-3. Insert MX delay action gear (185) into the axis of Gear base (182). Fix so that the cut part of MX delay action gear may be on the straight line with the angle of Gear base. (Fig. 13)

Fig. 12

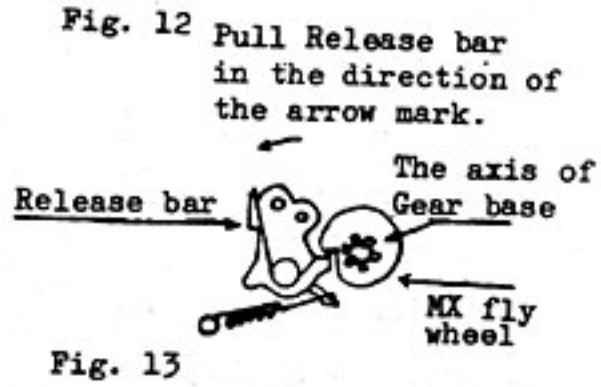

Fig. 13

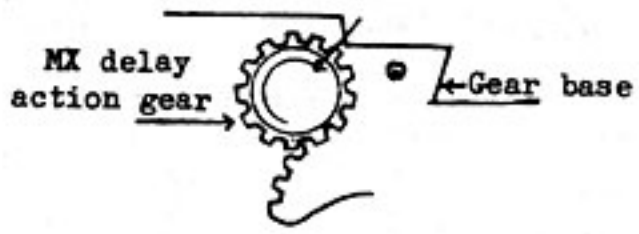

5-4. Check the operation of MX fly wheel (184) and MX delay action gear (185)

5-4-1. When Cocking lever (226) is set, the extended line of the cut part of MX delay action gear should coincide with the center line of Sector gear teeth (189). (Fig. 14)

The position of the cut part of MX delay action gear when Cocking lever is set.

Fig. 14

5-4-2. Actuate Cocking lever (226) slowly and the moment that Sector pawl gear (189) comes off Cocking & drive gear (206), the position of cam of MX fly wheel (184) should be 30° - 120° against Fly wheel stopper (193). (Fig. 15)

Fig. 15

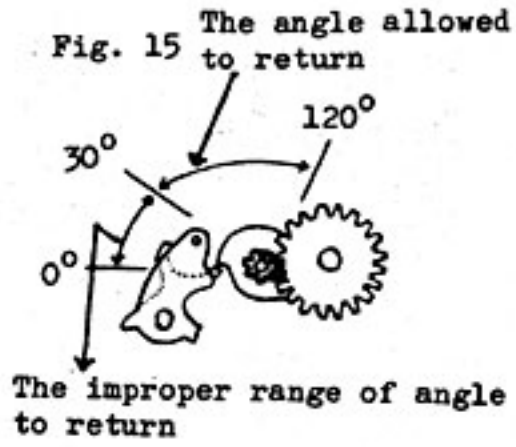

6. Adjustment of Synchronization Contact

6-1. Adjustment of X contact

6-1-1. Adjust the figure of X contact so that X contact may not come off the pin of Shutter drive ring (220). (Fig. 16)

Fig. 16

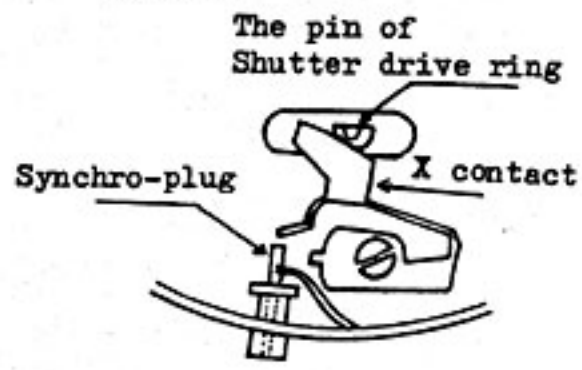

6-1-2. The moment before Shutter blade (219) is going to be fully open, the plug should contact X contact.

6-1-3. Check the insulation of X contact, Synchro-plug and Lead wire.

Fig. 17

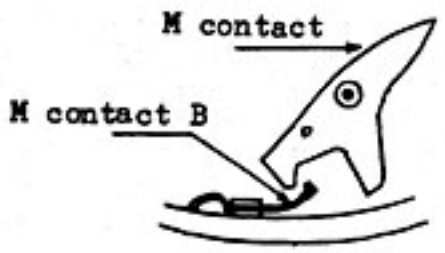

6-2. Adjustment of M contact

6-2-1. Bend M contact B toward M contact for better contact efficiency. (Fig. 17)

6-2-2. Check that M contact does not touch M contact B when the shutter is set with MX switch ring (223) set at M.

6-2-3. Check the insulation of M contact, M contact B and Lead wire.

6-2-4. Adjust time lag of synchro contact.

6-2-4-1. Proper time lag is 13.0 to 16.0 ms.

6-2-4-2. When time lag is fast, bring M contact B near M contact.

6-2-4-3. When time lag is slow, keep M contact B away from M contact.

Fig. 18

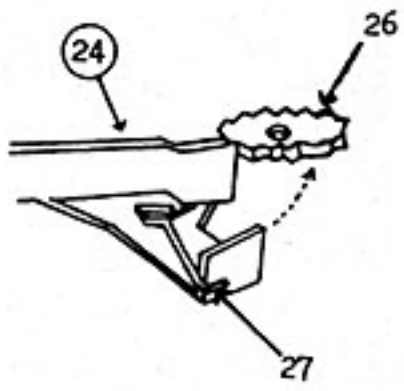

7. Adjustment of Counter

7-1. When Back cover (111) is open, Counter pawl (24) should be 0.2 mm apart from the teeth edge of Counter gear (26).

7-2. Return Counter gear (26) to 0 and when Back cover is closed, the tip of Counter pawl (24) should get in the bottom of the third tooth of Counter gear. This should be done by adjusting Counter pawl. (Fig. 18)

7-3. When Wind lever is advanced, check that Advance pawl (27) gets in the bottom of the first tooth of Counter gear (26) advancing one tooth and leaving a space for Counter pawl (24) to get in the next tooth. This adjustment should be done by the eccentric screw of Wind lever.

8. Adjustment of Range-finder

8-1. Adjustment of out-of-focus image

Set Focusing scale (135) at ∞ and view the chart in collimator or a subject more than 200 meters (660 ft.) away. If the subject (chart) is seen double as shown in Fig. 20, bend the front mirror frame till the images become one. (Fig. 19) (Fig. 21)

Fig. 19

In focus

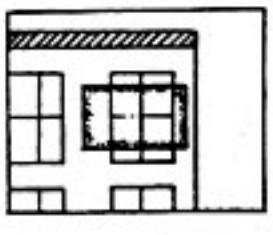

Fig. 20

Out of focus

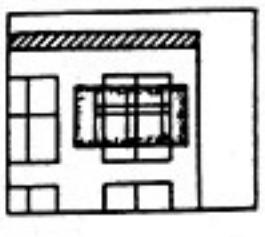

Fig. 21

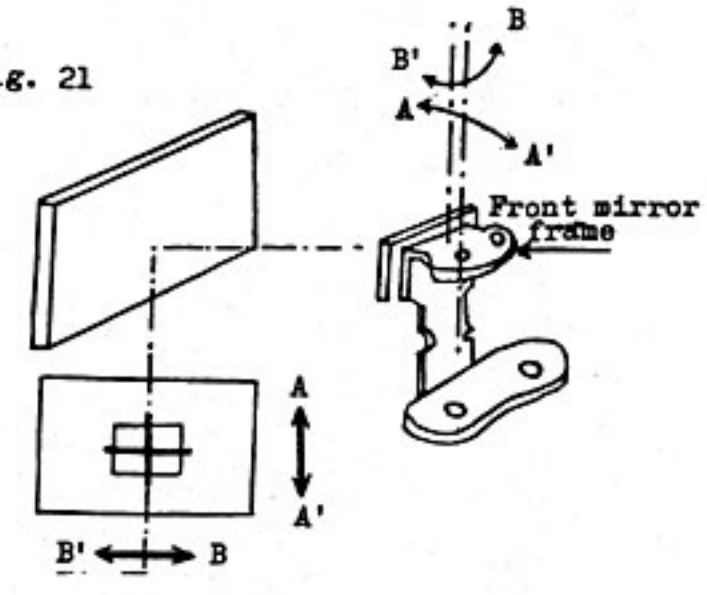

8-2. Adjustment of focus at near distance

Set Focusing scale (135) at ∞ , place a focusing glass on the film plane of Body (110), loosen Helical stopper screws and adjust till a clear image is obtained. Next, focus a subject about 3 meters (10 ft.) away, in that condition view the subject on the film plane and the image should be clear then.