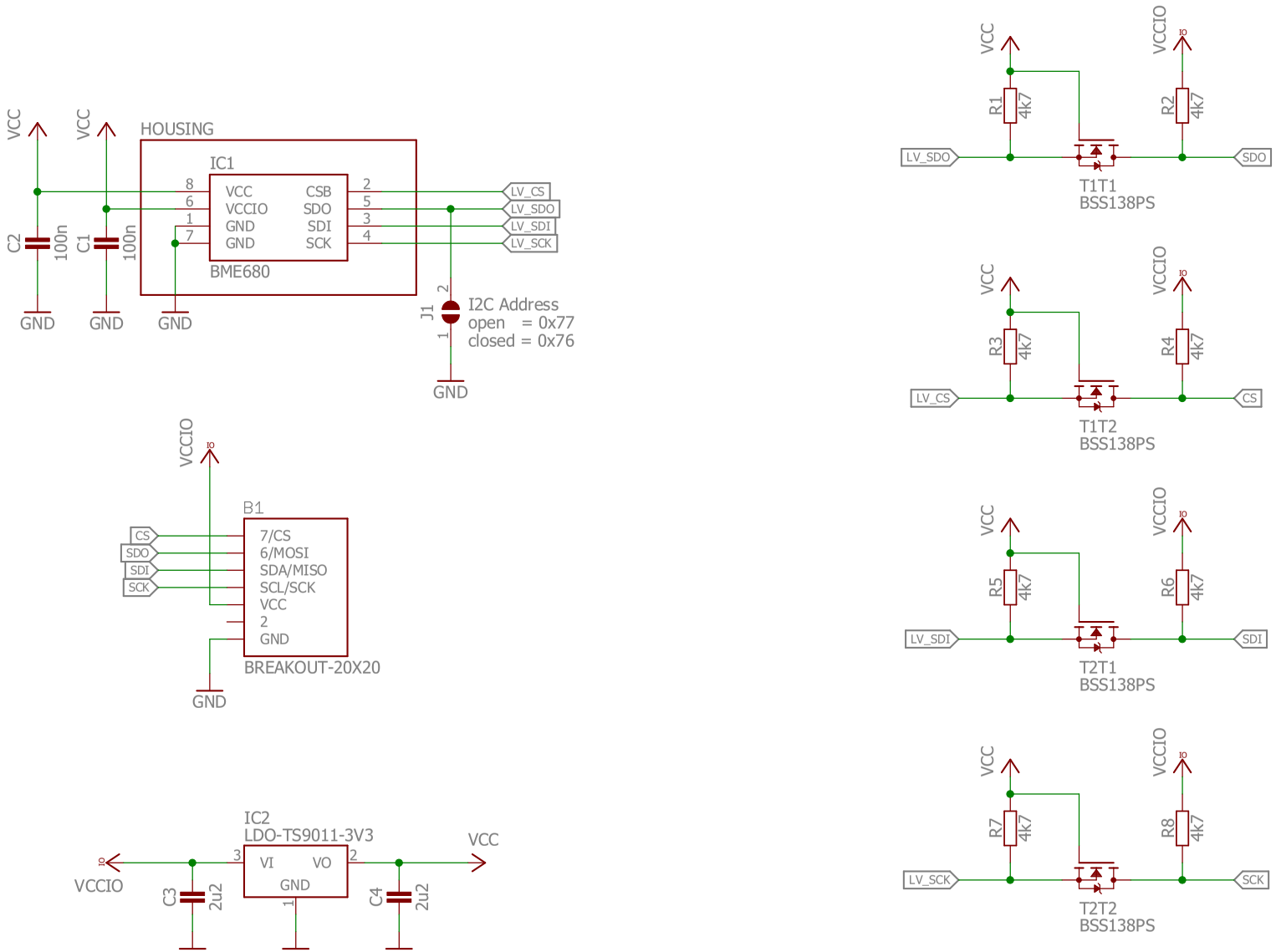

Released under the Creative Commons Attribution Share-Alike License. http://creativecommons.org/licenses/by-sa/4.0/

Designed by Stephan Watterott (Watterott electronic)

OSHW

Watterott

www.watterott.com

BME680-Breakout_v10

12.09.2017 22:42

Sheet: 1/1

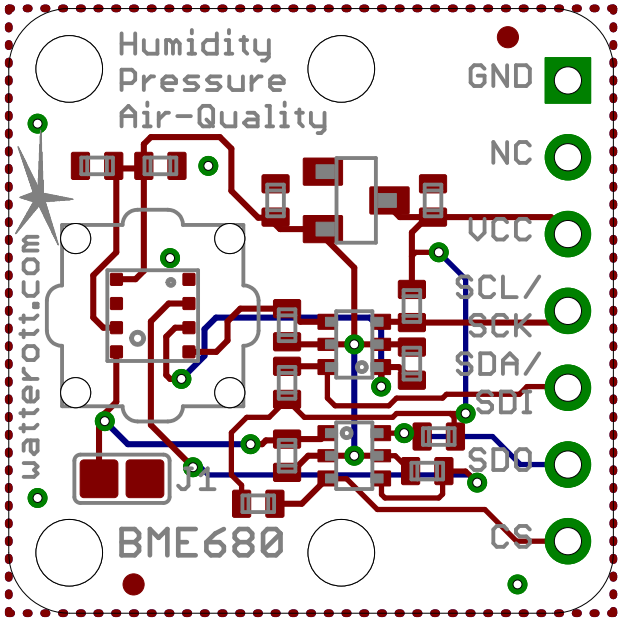
Humidity
Pressure
Air-Quality
GND
NC
VCC
SCL/
SCK
SDA/
SDI
SDO
CS
J1
BME680
watterott.com