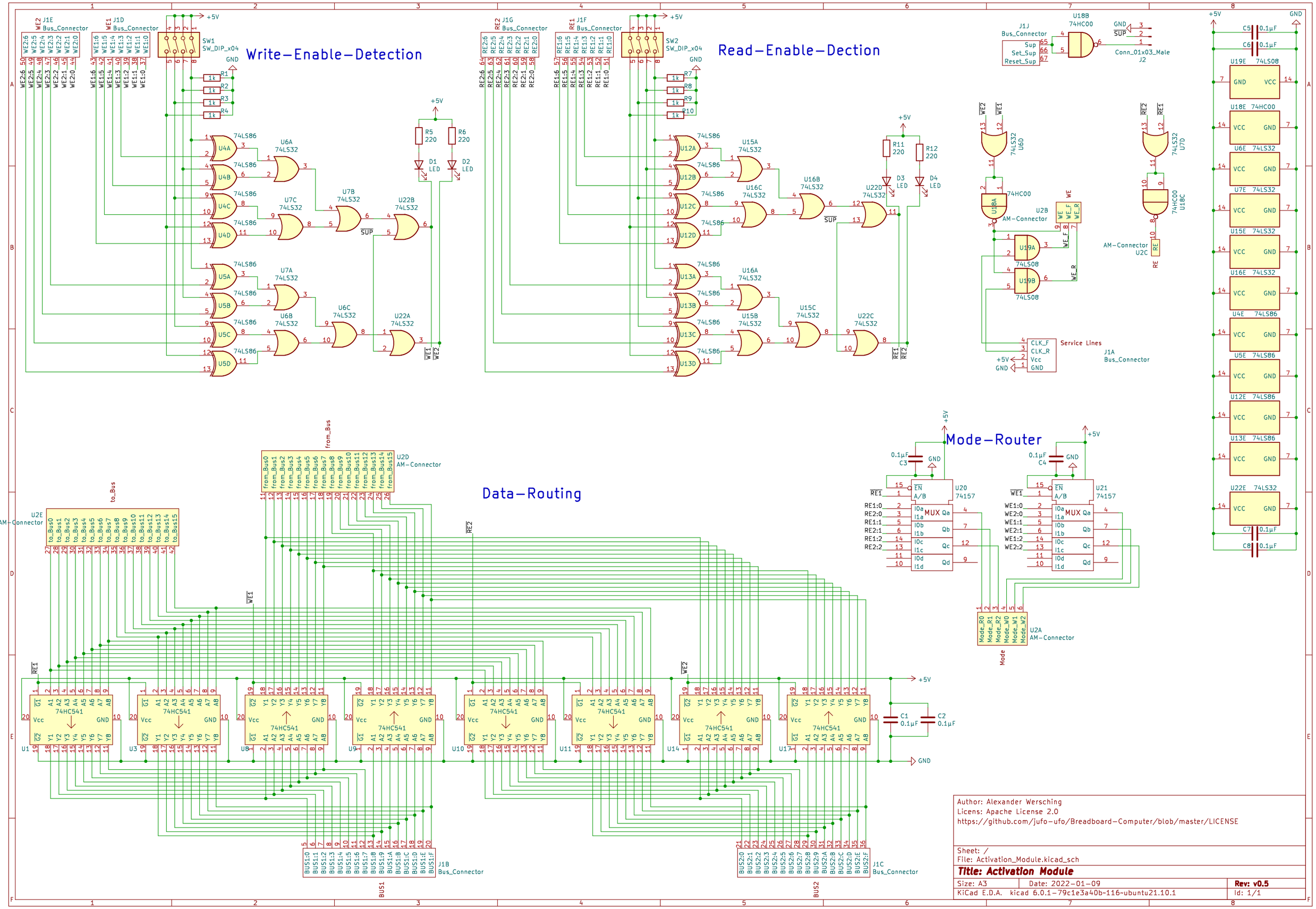

Author: Alexander Wersching
Licens: Apache License 2.0
https://github.com/jufo-ufo/Breadboard-Computer/blob/master/LICENSE

Sheet: /
File: Activation_Module.kicad_sch

Title: Activation Module

Size: A3	Date: 2022-01-09	Rev: v0.5
KiCad E.D.A. kicad 6.0.1-79c1e3a40b-116-ubuntu21.10.1		Id: 1/1