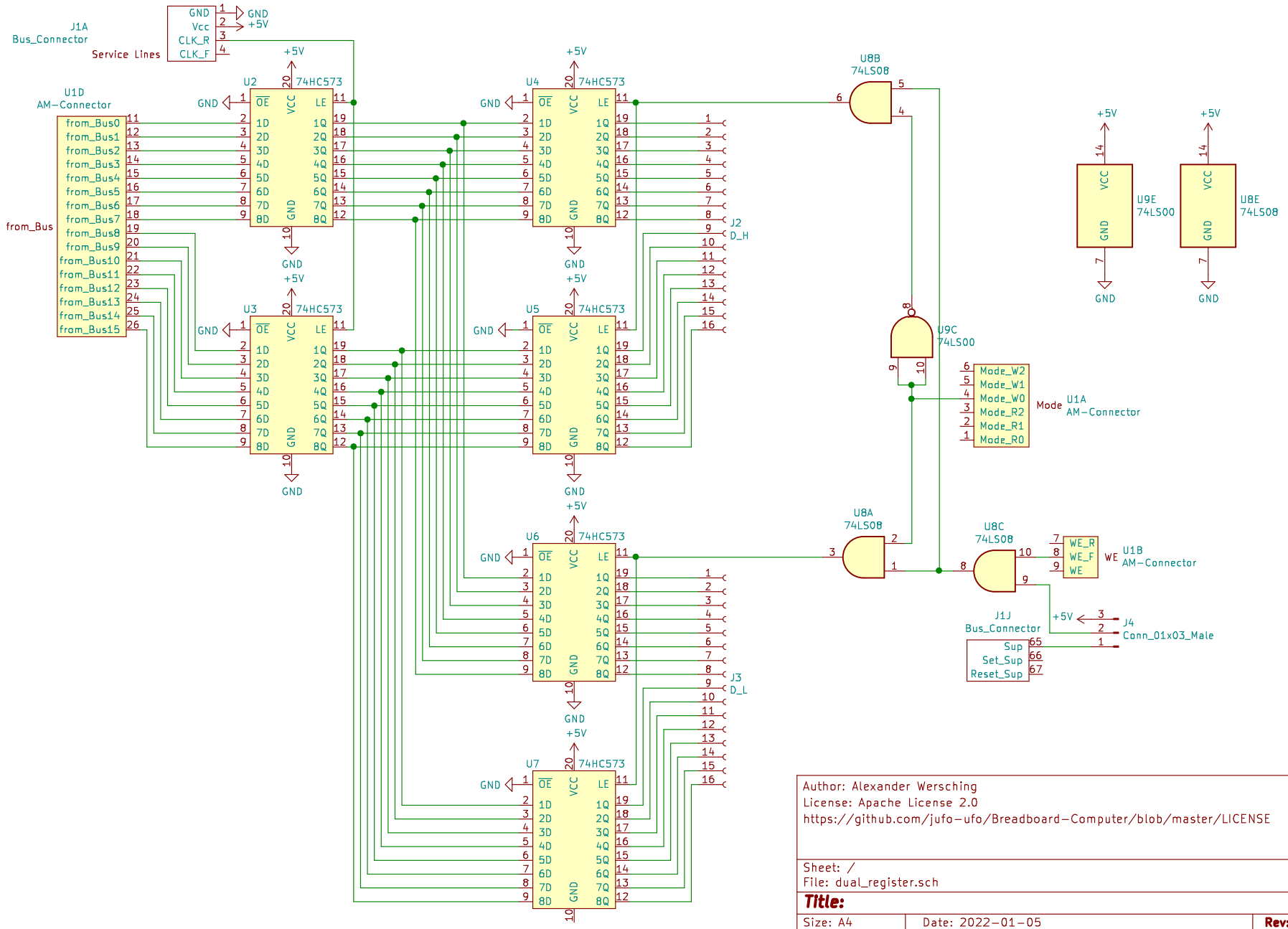

Author: Alexander Wersching
License: Apache License 2.0
https://github.com/jufo-ufo/Breadboard-Computer/blob/master/LICENSE

Sheet: /
File: dual_register.sch

Title:

Size: A4	Date: 2022-01-05	**Rev: v0.2**
KiCad E.D.A. kicad 5.99.0+really5.1.10+dfsg1-1		Id: 1/1