Digital IO

마이크로프로세서 종합 설계. 5주차.

오늘의 목표

1. **디지털 입출력 레지스터의 이해**
2. **디지털 입출력 실험**
    1. **Segment**
    2. **Button**

Atmega328p의 메모리맵

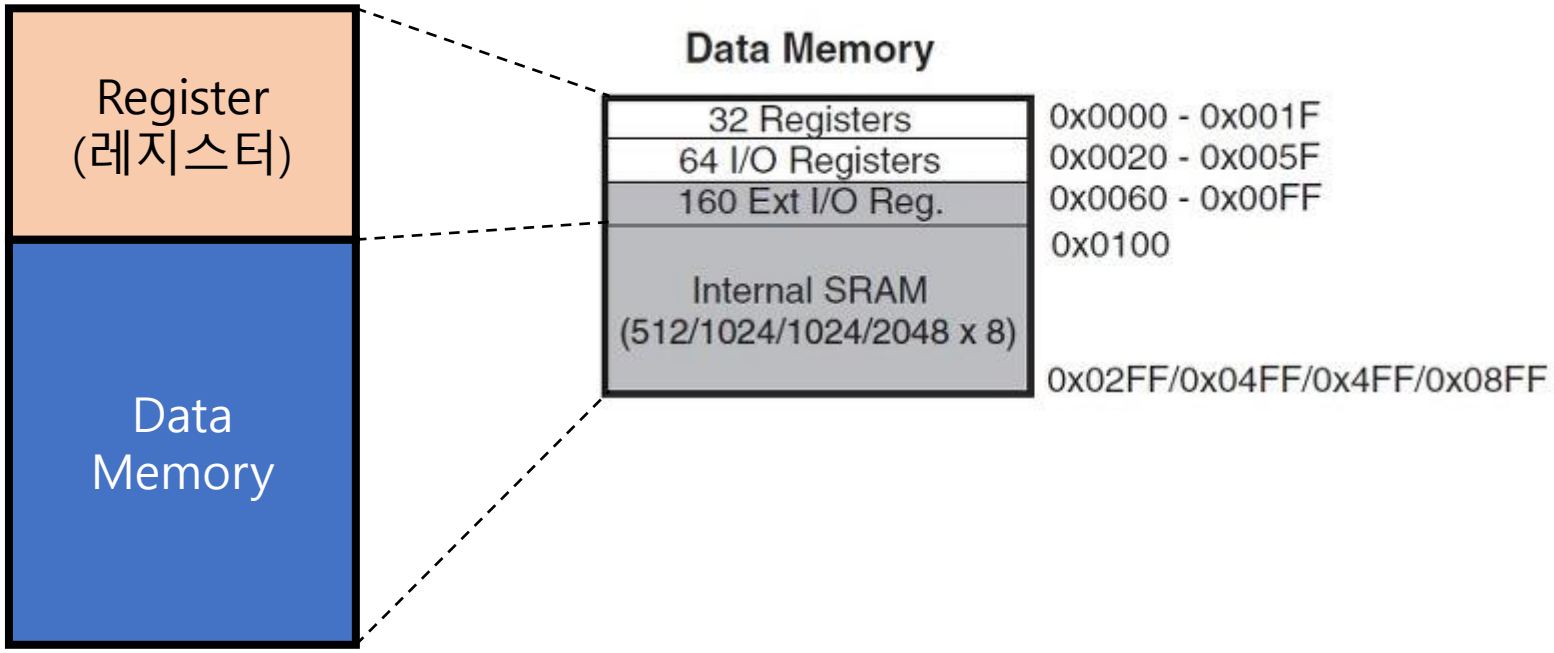

데이타시트 : https://ww1.microchip.com/downloads/en/DeviceDoc/Atmel-7810-Automotive-Microcontrollers-ATmega328P_Datasheet.pdf
30. Register Summary, 275 page 참고

아두이노 디지털 IO

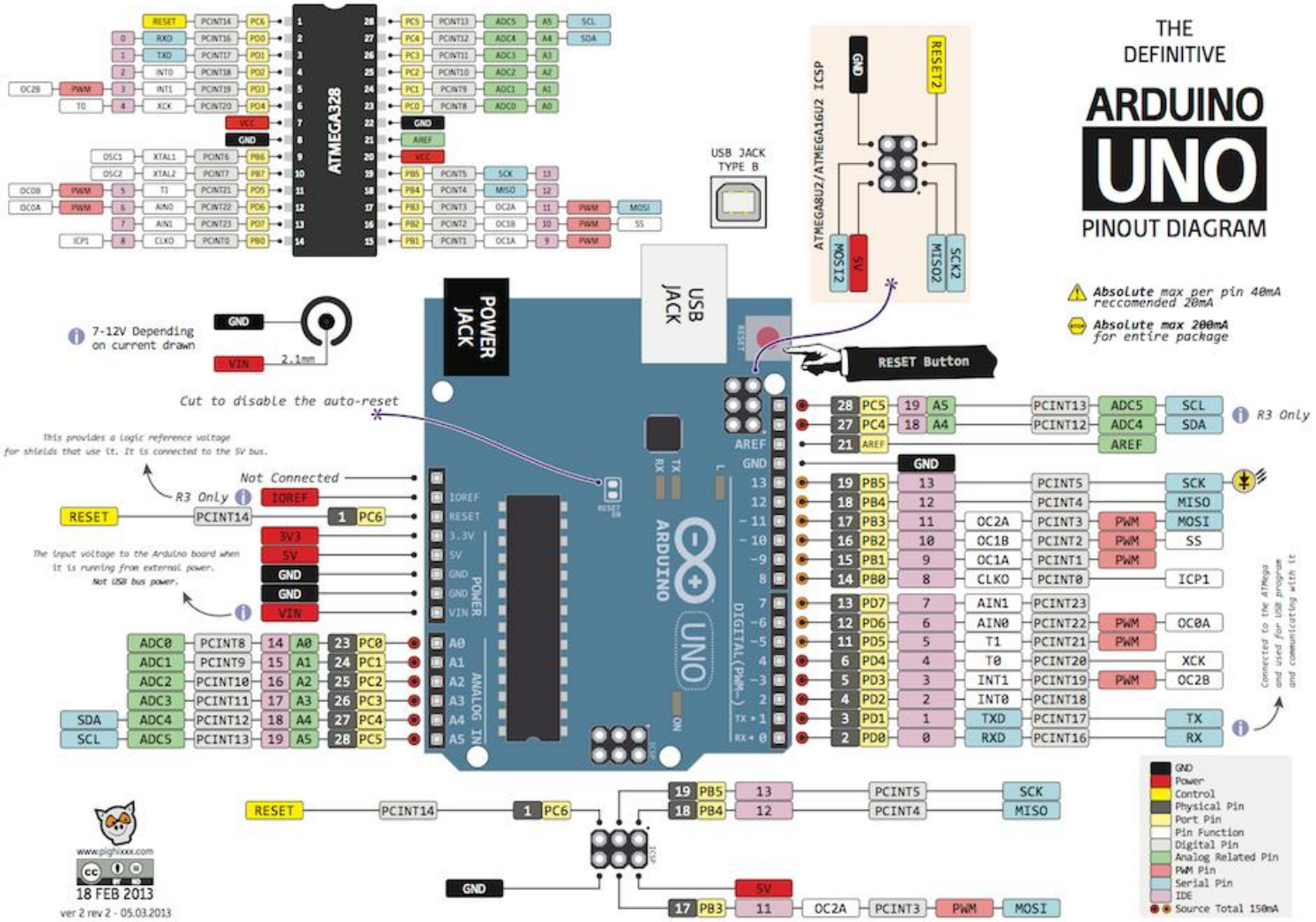
THE DEFINITIVE
ARDUINO
UNO
PINOUT DIAGRAM
ATMEGA328
ATMEGA8U2/ATMEGA16U2 ICSP
USB JACK TYPE B
POWER JACK
USB JACK
RESET Button
7-12V Depending on current drawn
Cut to disable the auto-reset
Not Connected
R3 Only
Absolute max per pin 40mA reccomended 20mA
Absolute max 200mA for entire package
18 FEB 2013
ver 2 rev 2 - 05.03.2013

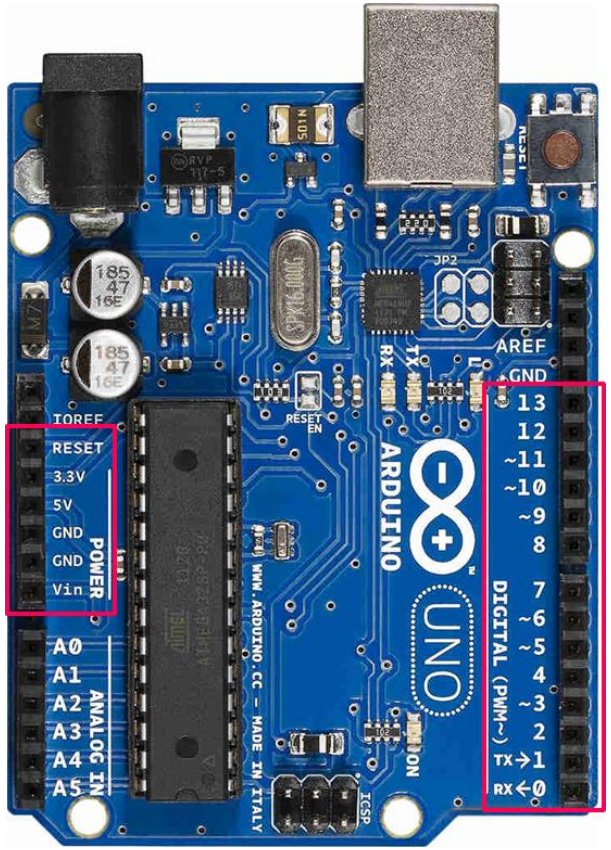
IOREF
RESET
3.3V
5V
GND
GND
Vin
POWER
A0
A1
A2
A3
A4
A5
ANALOG IN
DIGITAL (PWM~)
AREF
GND
13
12
~11
~10
~9
8
7
~6
~5
4
~3
2
TX→1
RX←0
ARDUINO
UNO
WWW.ARDUINO.CC – MADE IN ITALY

디지털 IO(Input/Output)

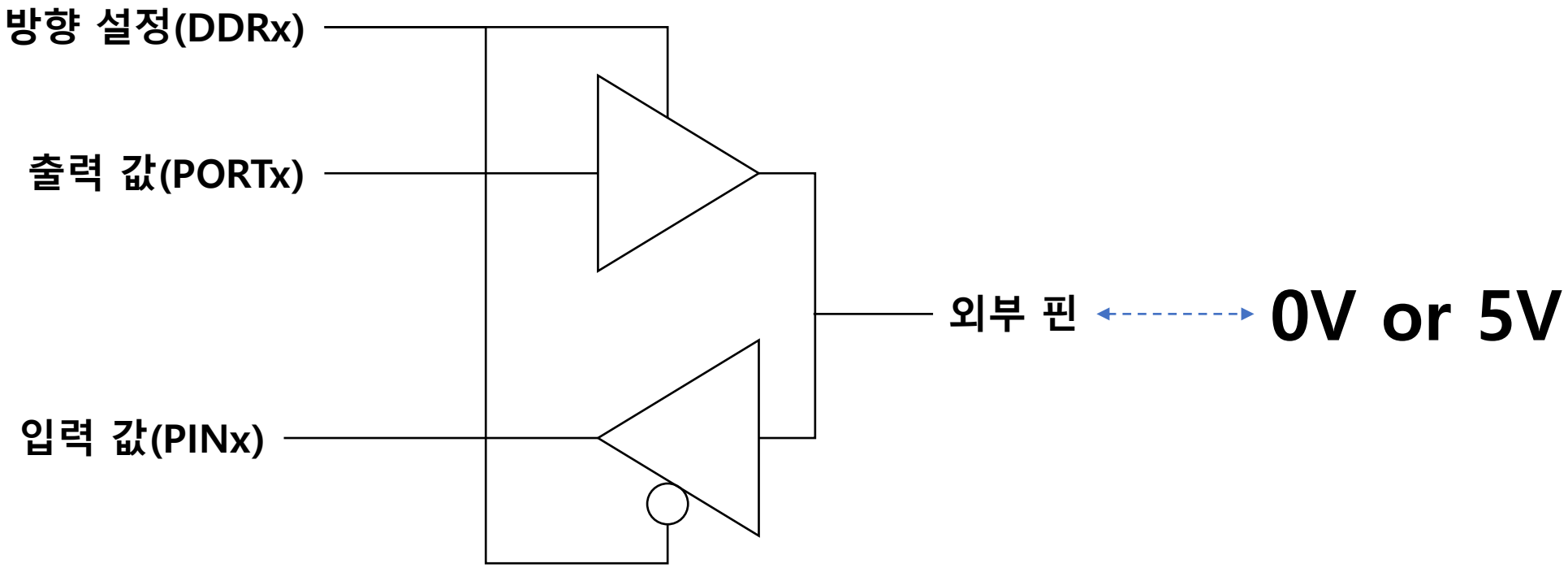

디지털 IO 포트 관련 레지스터

- Port

13.4.2 PORTB – The Port B Data Register

Bit	7	6	5	4	3	2	1	0	
0x05 (0x25)	PORTB7	PORTB6	PORTB5	PORTB4	PORTB3	PORTB2	PORTB1	PORTB0	PORTB
Read/Write	R/W	R/W	R/W	R/W	R/W	R/W	R/W	R/W	
Initial Value	0	0	0	0	0	0	0	0	

13.4.3 DDRB – The Port B Data Direction Register

Bit	7	6	5	4	3	2	1	0	
0x04 (0x24)	DDB7	DDB6	DDB5	DDB4	DDB3	DDB2	DDB1	DDB0	DDRB
Read/Write	R/W	R/W	R/W	R/W	R/W	R/W	R/W	R/W	
Initial Value	0	0	0	0	0	0	0	0	

13.4.4 PINB – The Port B Input Pins Address

Bit	7	6	5	4	3	2	1	0	
0x03 (0x23)	PINB7	PINB6	PINB5	PINB4	PINB3	PINB2	PINB1	PINB0	PINB
Read/Write	R	R	R	R	R	R	R	R	
Initial Value	N/A	N/A	N/A	N/A	N/A	N/A	N/A	N/A	

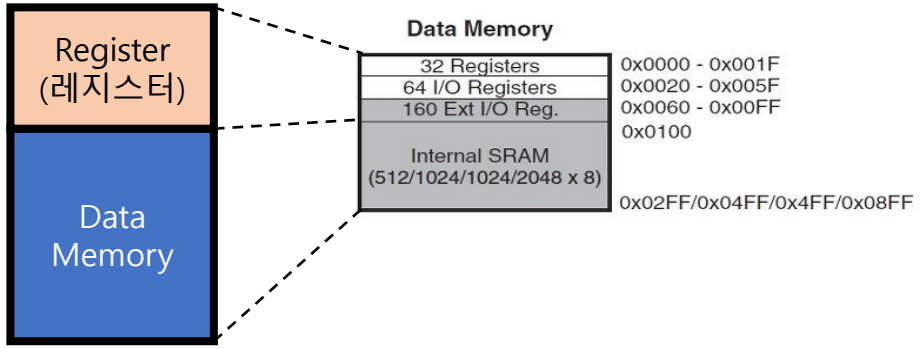

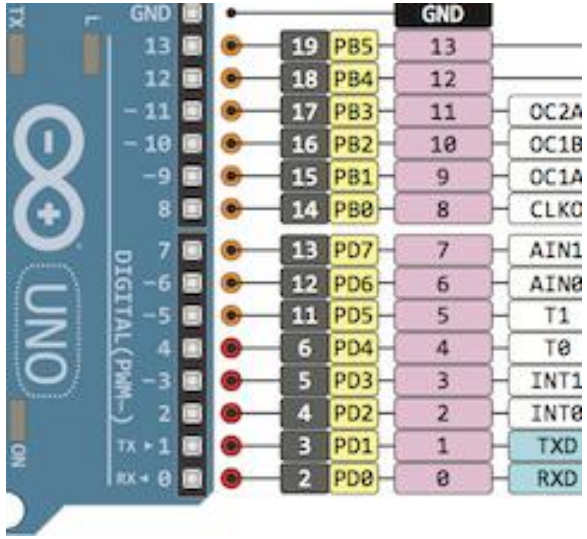

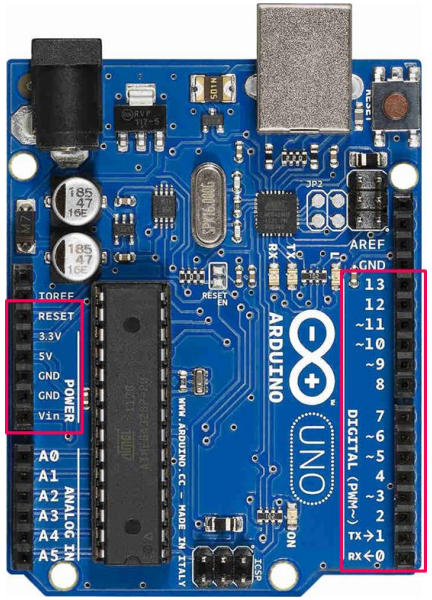

디지털 IO 포트 관련 레지스터

- Port

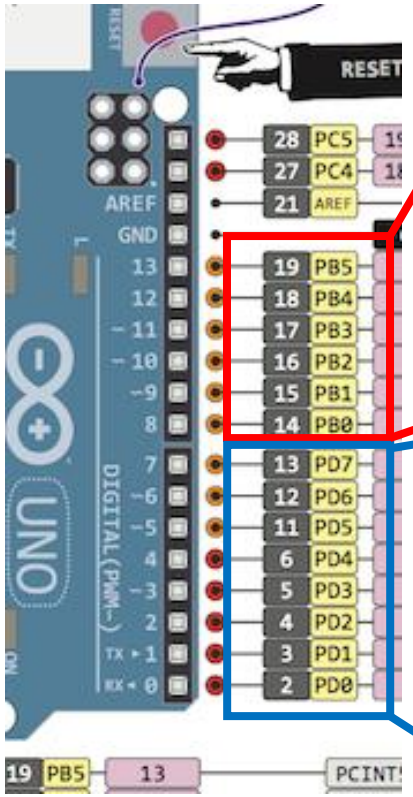

13.4.2 PORTB – The Port B Data Register

Bit	7	6	5	4	3	2	1	0	
0x05 (0x25)	PORTB7	PORTB6	PORTB5	PORTB4	PORTB3	PORTB2	PORTB1	PORTB0	PORTB
Read/Write	R/W	R/W	R/W	R/W	R/W	R/W	R/W	R/W	
Initial Value	0	0	0	0	0	0	0	0	

13.4.3 DDRB – The Port B Data Direction Register

Bit	7	6	5	4	3	2	1	0	
0x04 (0x24)	DDB7	DDB6	DDB5	DDB4	DDB3	DDB2	DDB1	DDB0	DDRB
Read/Write	R/W	R/W	R/W	R/W	R/W	R/W	R/W	R/W	
Initial Value	0	0	0	0	0	0	0	0	

13.4.4 PINB – The Port B Input Pins Address

Bit	7	6	5	4	3	2	1	0	
0x03 (0x23)	PINB7	PINB6	PINB5	PINB4	PINB3	PINB2	PINB1	PINB0	PINB
Read/Write	R	R	R	R	R	R	R	R	
Initial Value	N/A	N/A	N/A	N/A	N/A	N/A	N/A	N/A	

13.4.8 PORTD – The Port D Data Register

Bit	7	6	5	4	3	2	1	0	
0x0B (0x2B)	PORTD7	PORTD6	PORTD5	PORTD4	PORTD3	PORTD2	PORTD1	PORTD0	PORTD
Read/Write	R/W	R/W	R/W	R/W	R/W	R/W	R/W	R/W	
Initial Value	0	0	0	0	0	0	0	0	

13.4.9 DDRD – The Port D Data Direction Register

Bit	7	6	5	4	3	2	1	0	
0x0A (0x2A)	DDD7	DDD6	DDD5	DDD4	DDD3	DDD2	DDD1	DDD0	DDRD
Read/Write	R/W	R/W	R/W	R/W	R/W	R/W	R/W	R/W	
Initial Value	0	0	0	0	0	0	0	0	

13.4.10 PIND – The Port D Input Pins Address

Bit	7	6	5	4	3	2	1	0	
0x09 (0x29)	PIND7	PIND6	PIND5	PIND4	PIND3	PIND2	PIND1	PIND0	PIND
Read/Write	R	R	R	R	R	R	R	R	
Initial Value	N/A	N/A	N/A	N/A	N/A	N/A	N/A	N/A	

IO 포트 출력 실험

- LED를 이용한 포트 Output 테스트

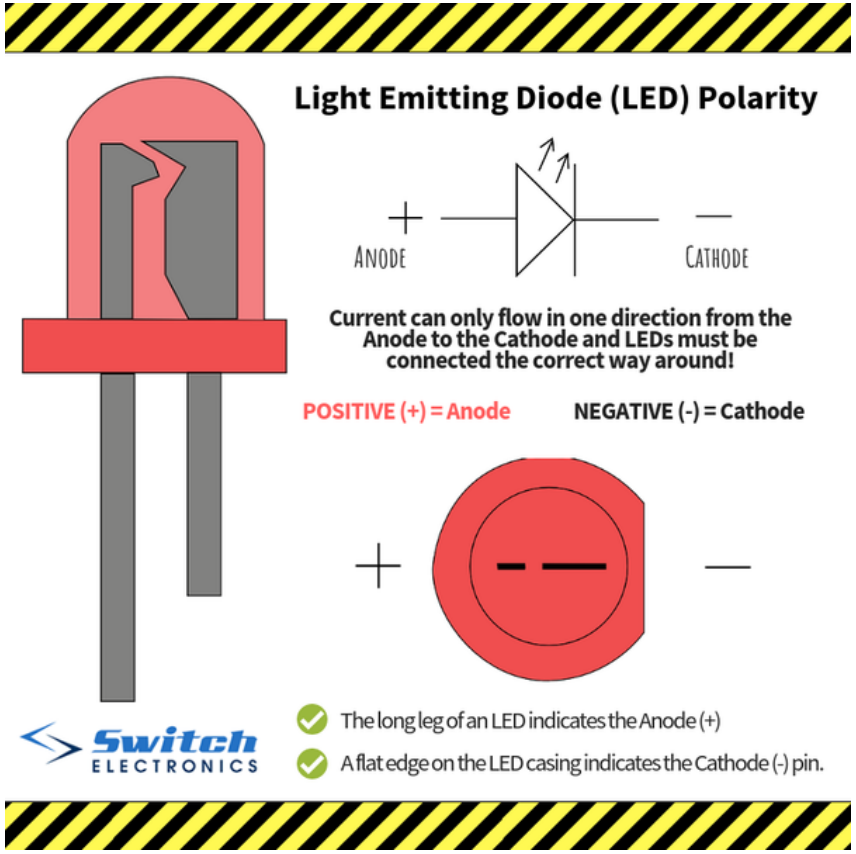

IO 포트 출력 실험3 - QUIZ

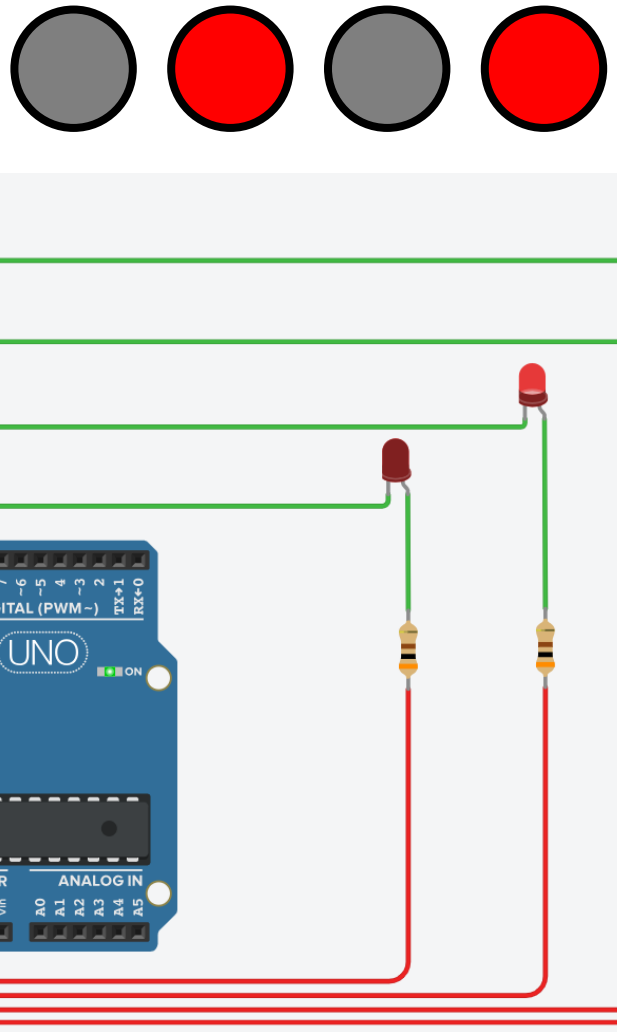

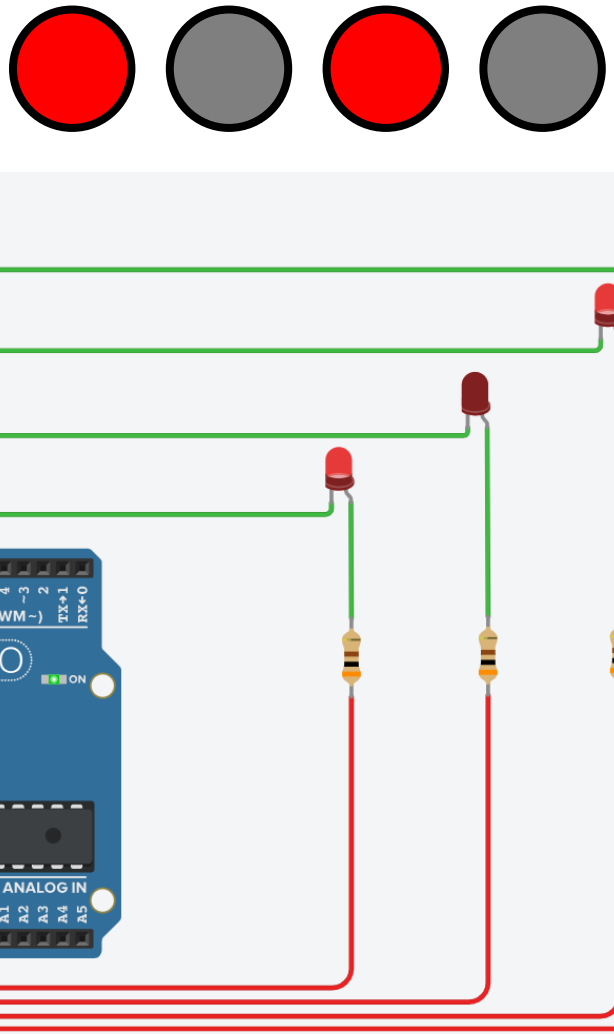

LED를 이용한 포트 제어 실험

- 7-segment 실험

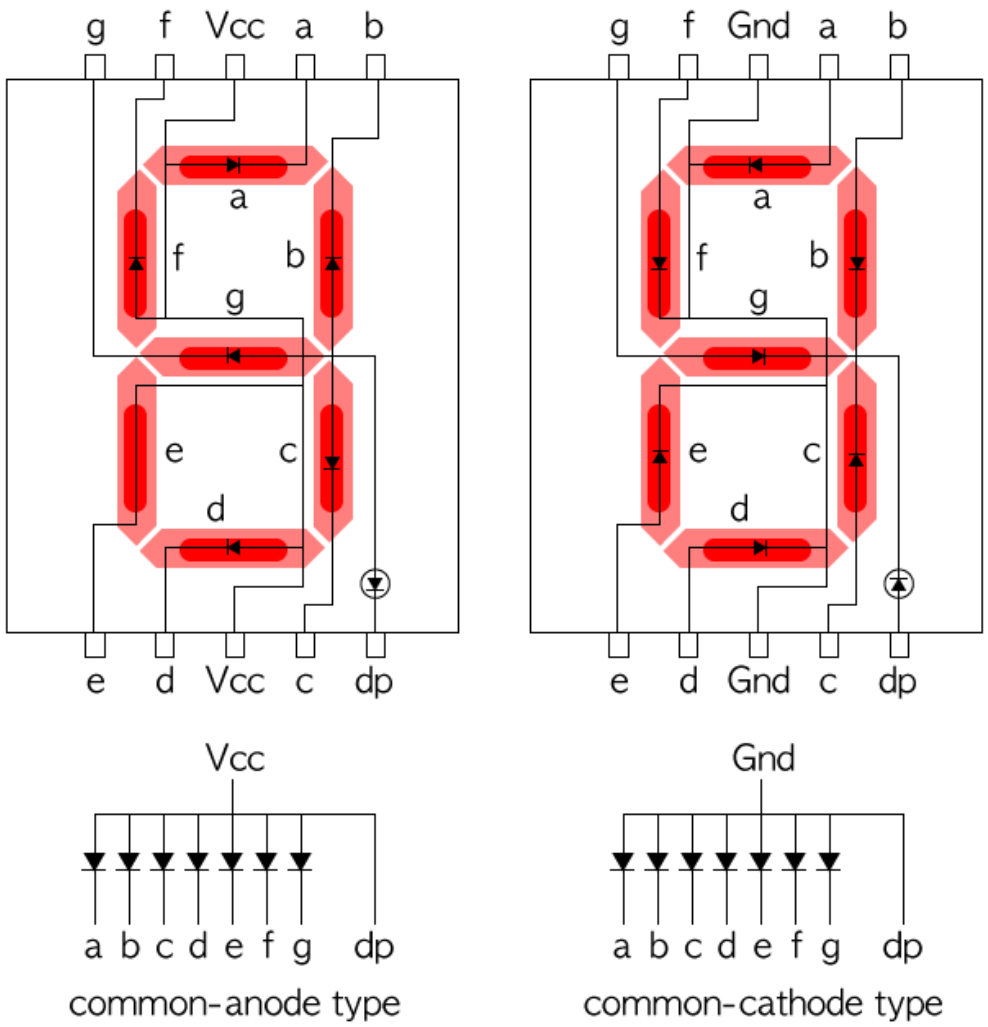

LED를 이용한 포트 제어 실험

- 7-segment 실험

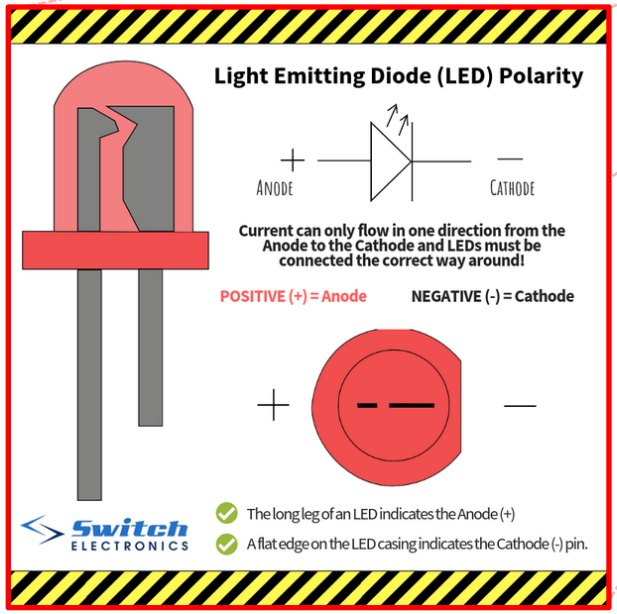

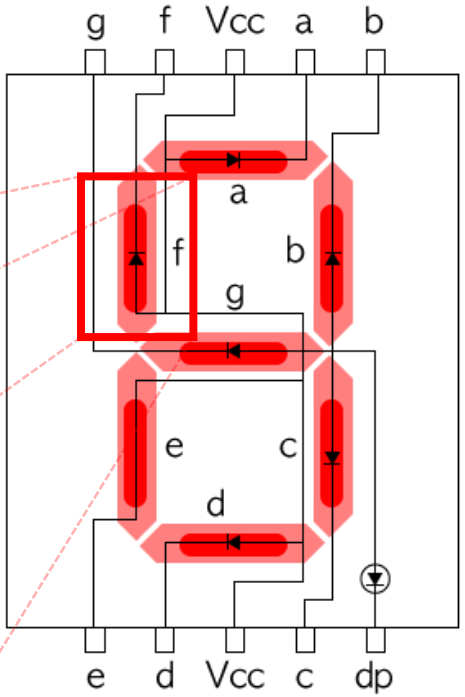

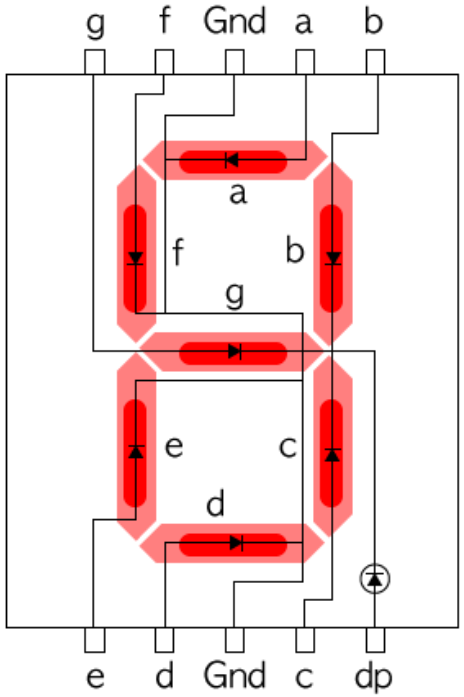

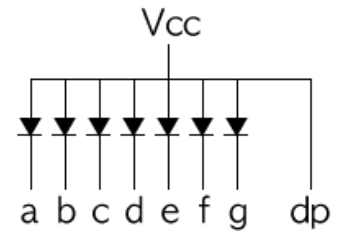

common-anode type

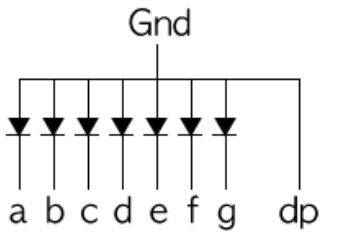

common-cathode type

LED를 이용한 포트 제어 실험

- 7-segment 실험

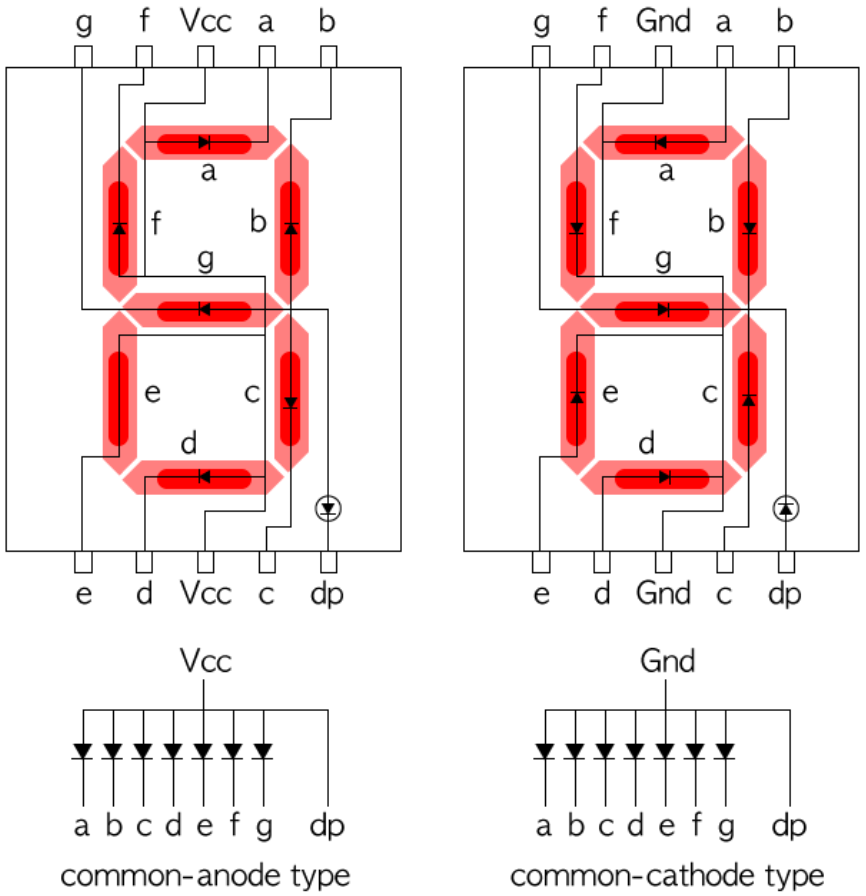

Common-anode type

0 = a(0) b(0) c(0) d(0) e(0) f(0) g(1) DP(1)

1 = a(1) b(0) c(0) d(1) e(1) f(1) g(1) DP(1)

2 = a(0) b(0) c(1) d(0) e(0) f(1) g(0) DP(1)

3 = a(0) b(0) c(0) d(0) e(1) f(1) g(0) DP(1)

4 = a(1) b(0) c(0) d(1) e(1) f(0) g(0) DP(1)

5 = a(0) b(1) c(0) d(0) e(1) f(0) g(0) DP(1)

6 = a(0) b(1) c(0) d(0) e(0) f(0) g(0) DP(1)

7 = a(0) b(0) c(0) d(1) e(1) f(0) g(1) DP(1)

8 = a(0) b(0) c(0) d(0) e(0) f(0) g(0) DP(1)

9 = a(0) b(0) c(0) d(0) e(1) f(0) g(0) DP(1)

. = DP(0)

LED를 이용한 포트 제어 실험

- 7-segment 실험

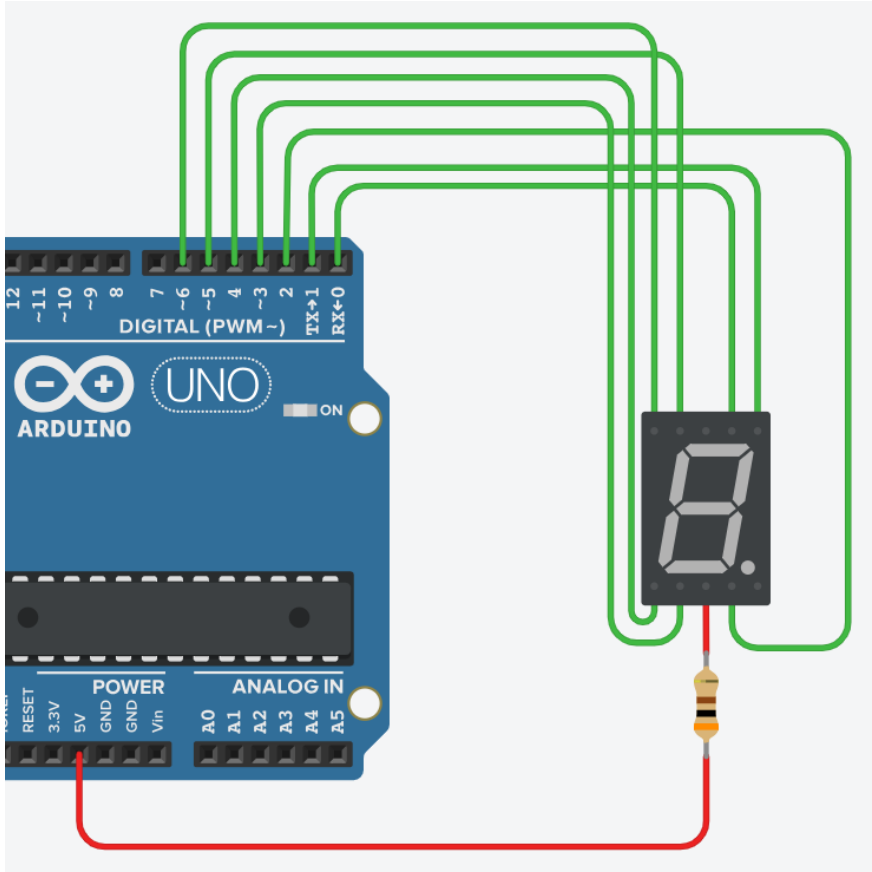

a	→	PD0
b	→	PD1
c	→	PD2
d	→	PD3
e	→	PD4
f	→	PD5
g	→	PD6
DP	→	PD7

LED를 이용한 포트 제어 실험

- 7-segment 실험

0 = a(0) b(0) c(0) d(0) e(0) f(0) g(1) DP(1)

1 = a(1) b(0) c(0) d(1) e(1) f(1) g(1) DP(1)

2 = a(0) b(0) c(1) d(0) e(0) f(1) g(0) DP(1)

3 = a(0) b(0) c(0) d(0) e(1) f(1) g(0) DP(1)

4 = a(1) b(0) c(0) d(1) e(1) f(0) g(0) DP(1)

5 = a(0) b(1) c(0) d(0) e(1) f(0) g(0) DP(1)

6 = a(0) b(1) c(0) d(0) e(0) f(0) g(0) DP(1)

7 = a(0) b(0) c(0) d(1) e(1) f(0) g(1) DP(1)

8 = a(0) b(0) c(0) d(0) e(0) f(0) g(0) DP(1)

9 = a(0) b(0) c(0) d(0) e(1) f(0) g(0) DP(1)

. = DP(0)

		a	b	c	d	e	f	g	DP
		PD0	PD1	PD2	PD3	PD4	PD5	PD6	PD7
0	→	0	0	0	0	0	0	1	1
1	→	1	0	0	1	1	1	1	1
2	→	0	0	1	0	0	1	0	1
3	→	0	0	0	0	1	1	0	1
4	→	1	0	0	1	1	0	0	1
5	→	0	1	0	0	1	0	0	1
6	→	0	1	0	0	0	0	0	1
7	→	0	0	0	1	1	0	1	1
0	→	0	0	0	0	0	0	0	1
9	→	0	0	0	0	1	0	0	1

LED를 이용한 포트 제어 실험

- 7-segment 실험

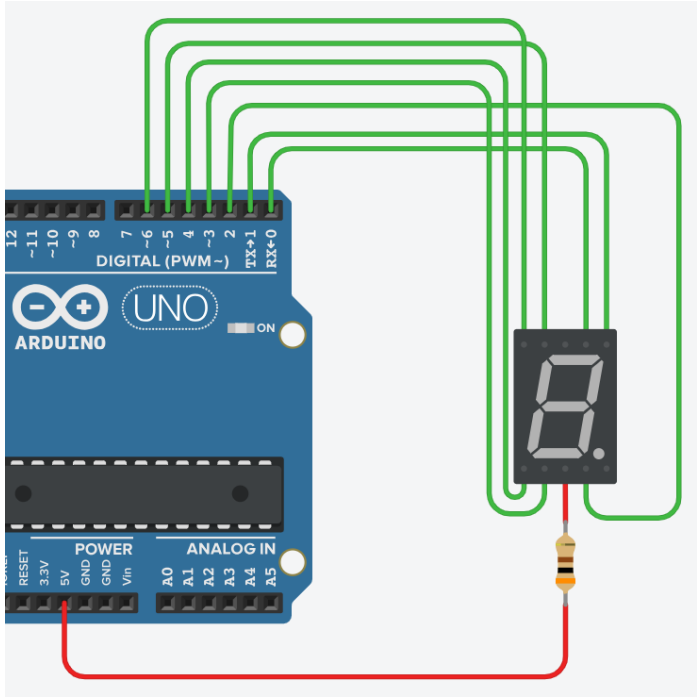

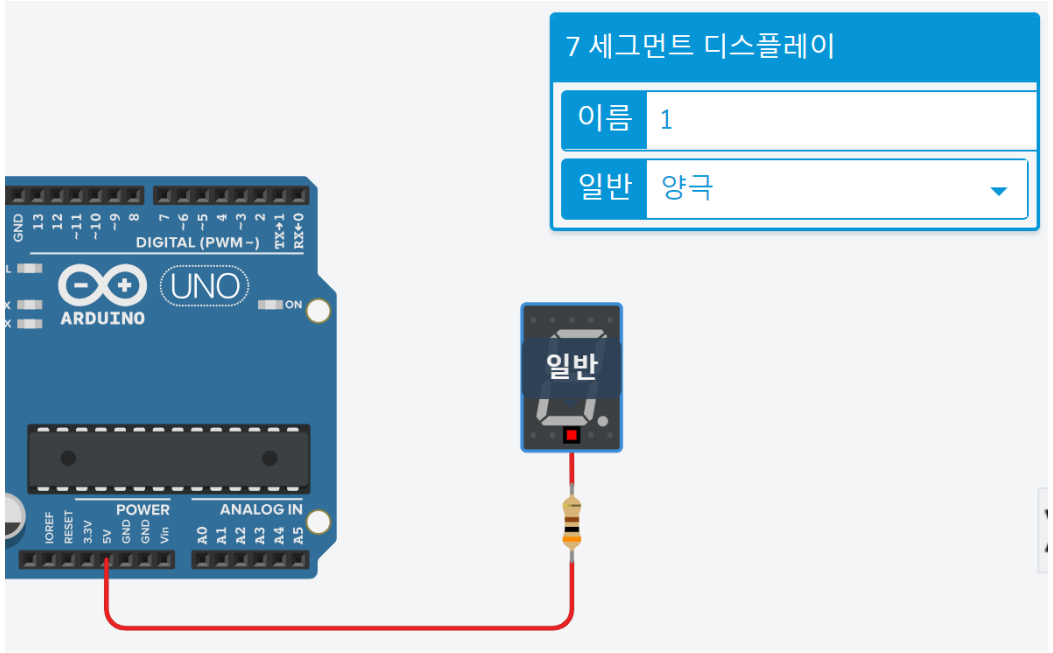

LED를 이용한 포트 제어 실험

- 7-segment 실험

```
void setup()
{
  DDRD = B00000001 ;
}

void loop()
{
 PORTD = B00000000 ;
}
```

```
void setup()
{
  DDRD = B00000001 ;
}

void loop()
{
 PORTD = B00000001 ;
}
```

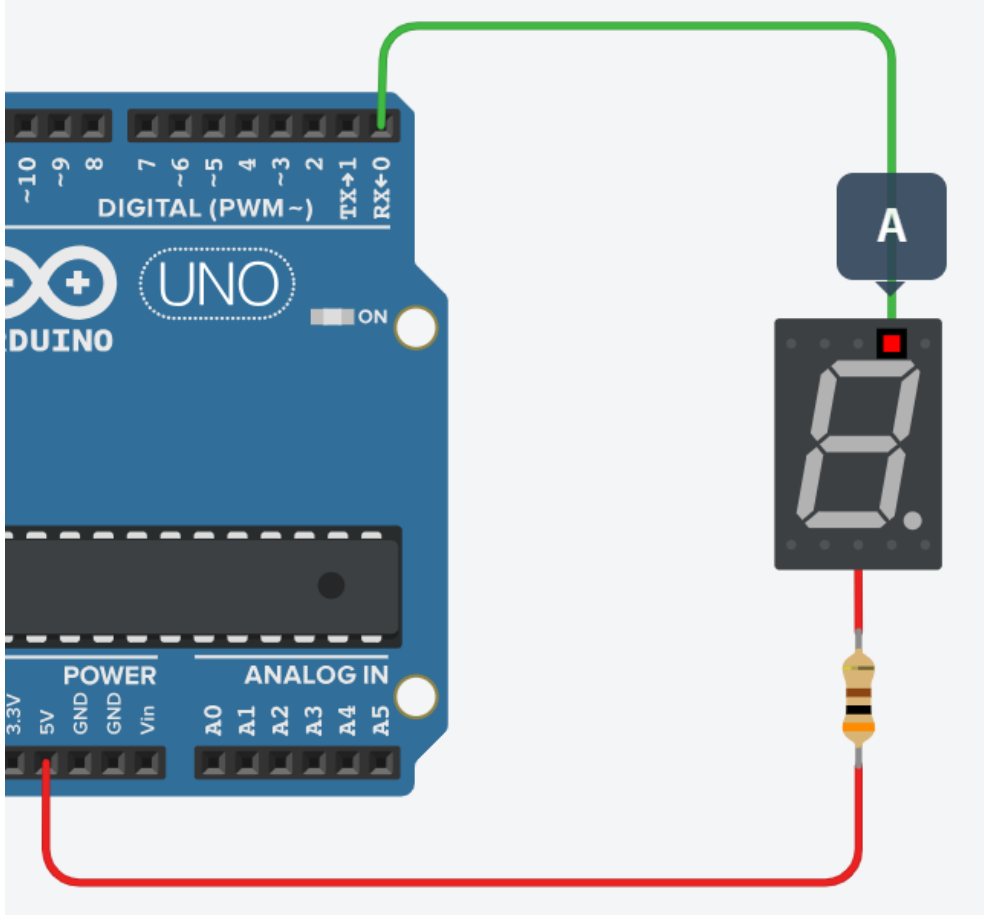

LED를 이용한 포트 제어 실험

- 7-segment 실험

```
void setup()
{
  DDRD = B00000011 ;
}

void loop()
{
 PORTD = B00000000 ;
}
```

```
void setup()
{
  DDRD = B00000011 ;
}

void loop()
{
 PORTD = B00000011 ;
}
```

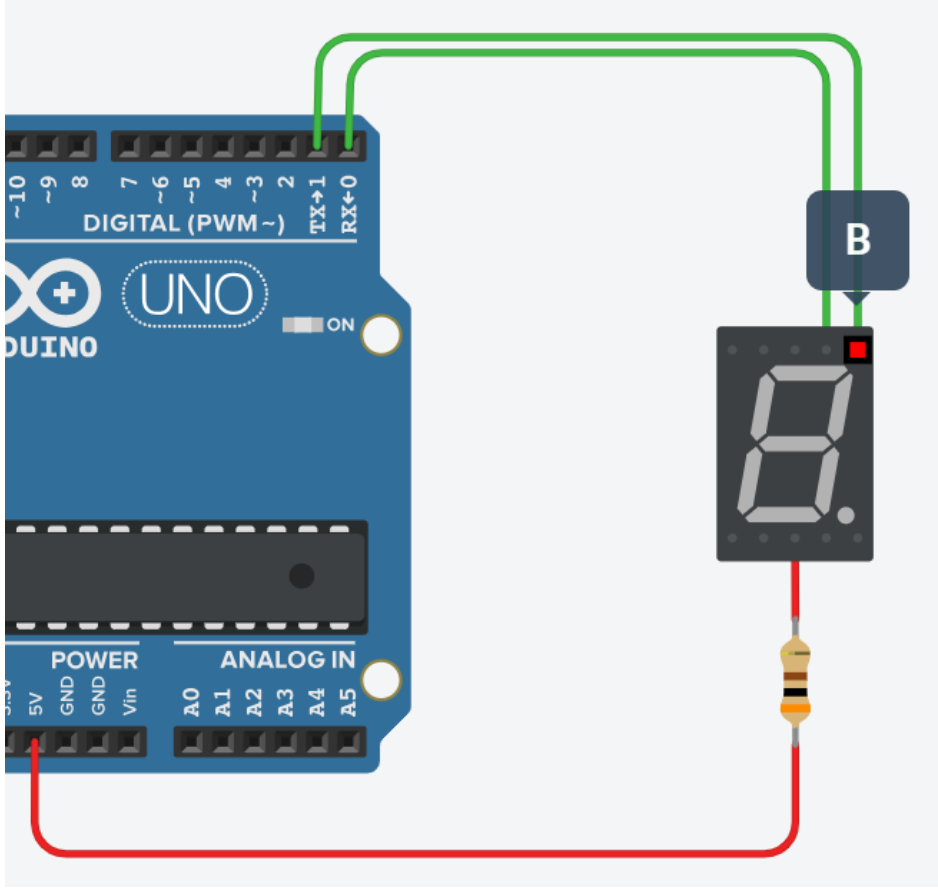

LED를 이용한 포트 제어 실험

- 7-segment 실험

```
void setup()
{
  DDRD = B00000111 ;
}

void loop()
{
 PORTD = B00000000 ;
}
```

```
void setup()
{
  DDRD = B00000111 ;
}

void loop()
{
 PORTD = B00000111 ;
}
```

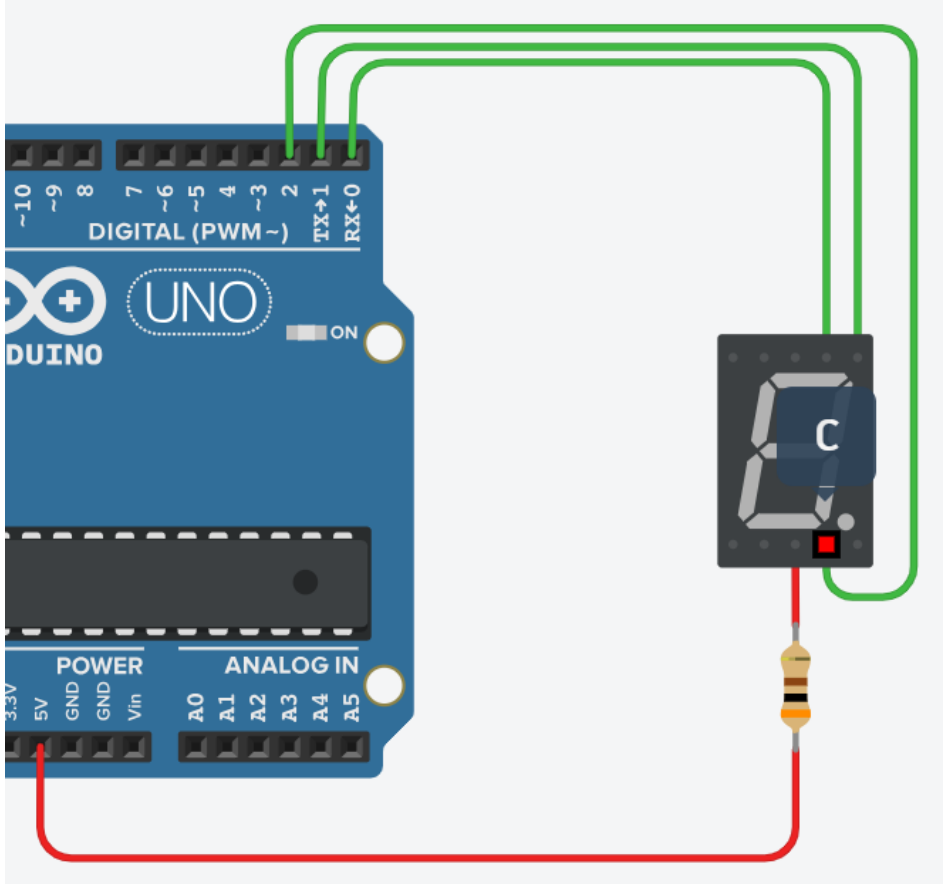

LED를 이용한 포트 제어 실험

- 7-segment 실험

```
void setup()
{
  DDRD = B00001111 ;
}

void loop()
{
 PORTD = B00000000 ;
}
```

```
void setup()
{
  DDRD = B00001111 ;
}

void loop()
{
 PORTD = B00001111 ;
}
```

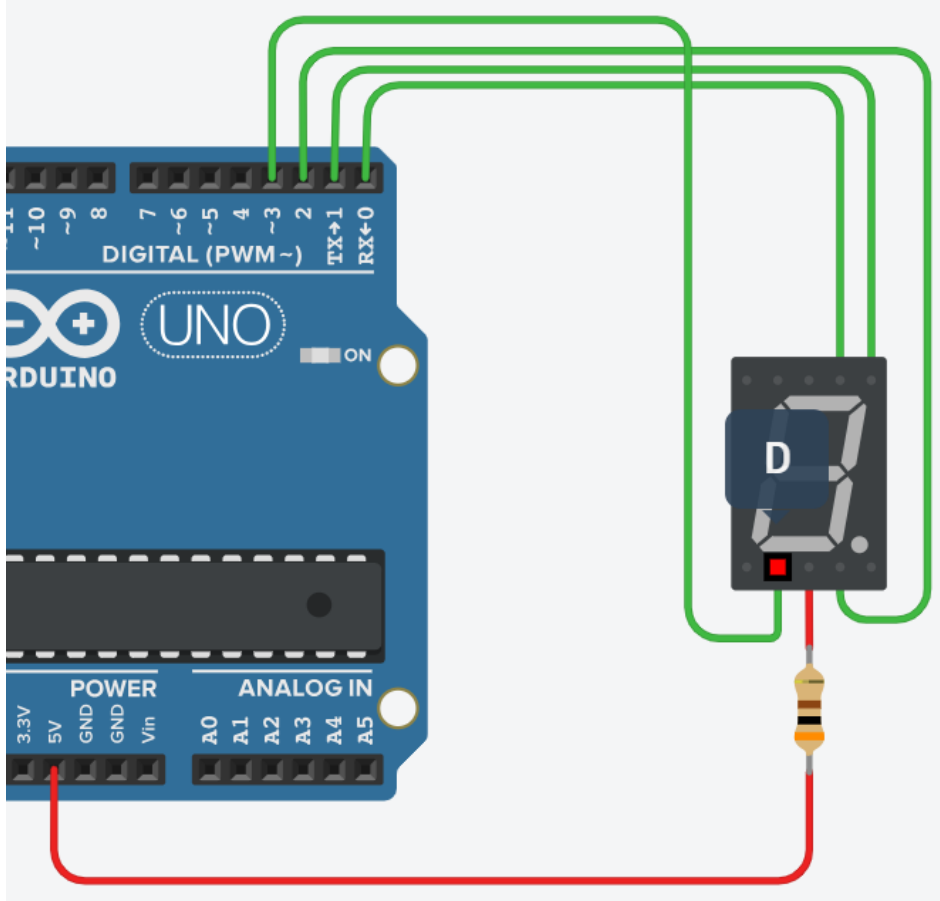

LED를 이용한 포트 제어 실험

- 7-segment 실험

```
void setup()
{
  DDRD = B00111111 ;
}

void loop()
{
 PORTD = B00000000 ;
}
```

```
void setup()
{
  DDRD = B00111111 ;
}

void loop()
{
 PORTD = B00111111 ;
}
```

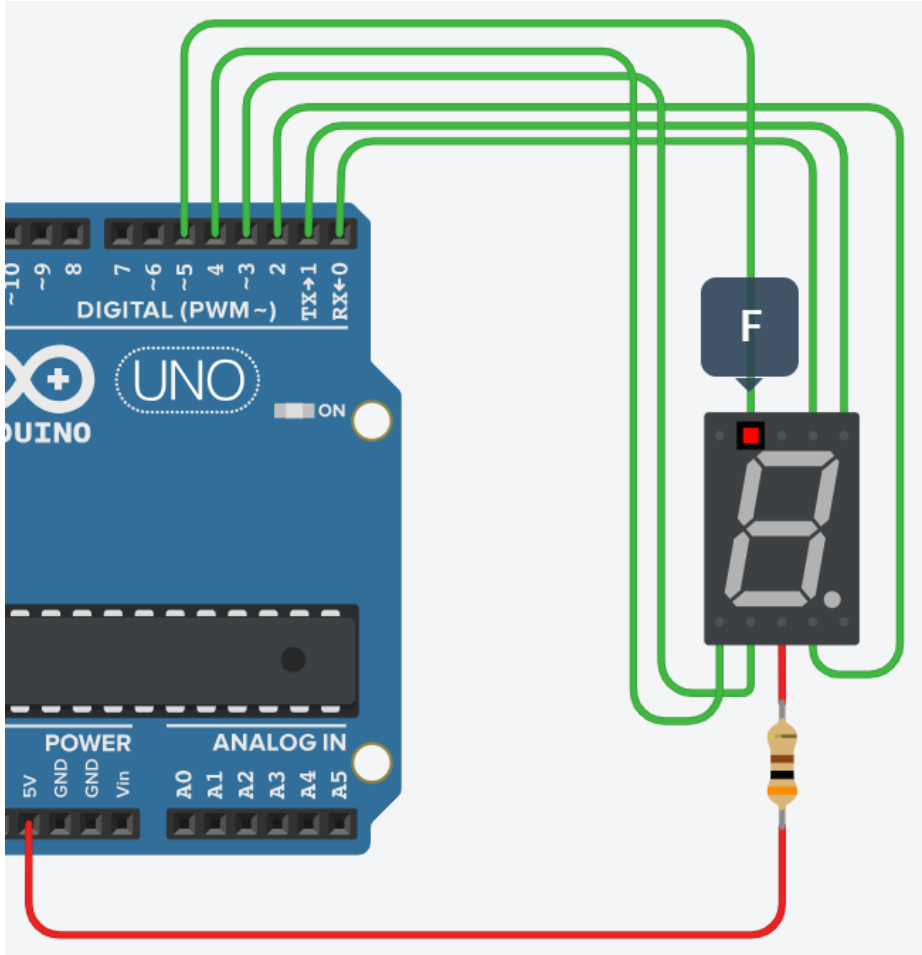

LED를 이용한 포트 제어 실험

- 7-segment 실험

```
void setup()
{
  DDRD = B01111111 ;
}

void loop()
{
 PORTD = B00000000 ;
}
```

```
void setup()
{
  DDRD = B01111111 ;
}

void loop()
{
 PORTD = B01111111 ;
}
```

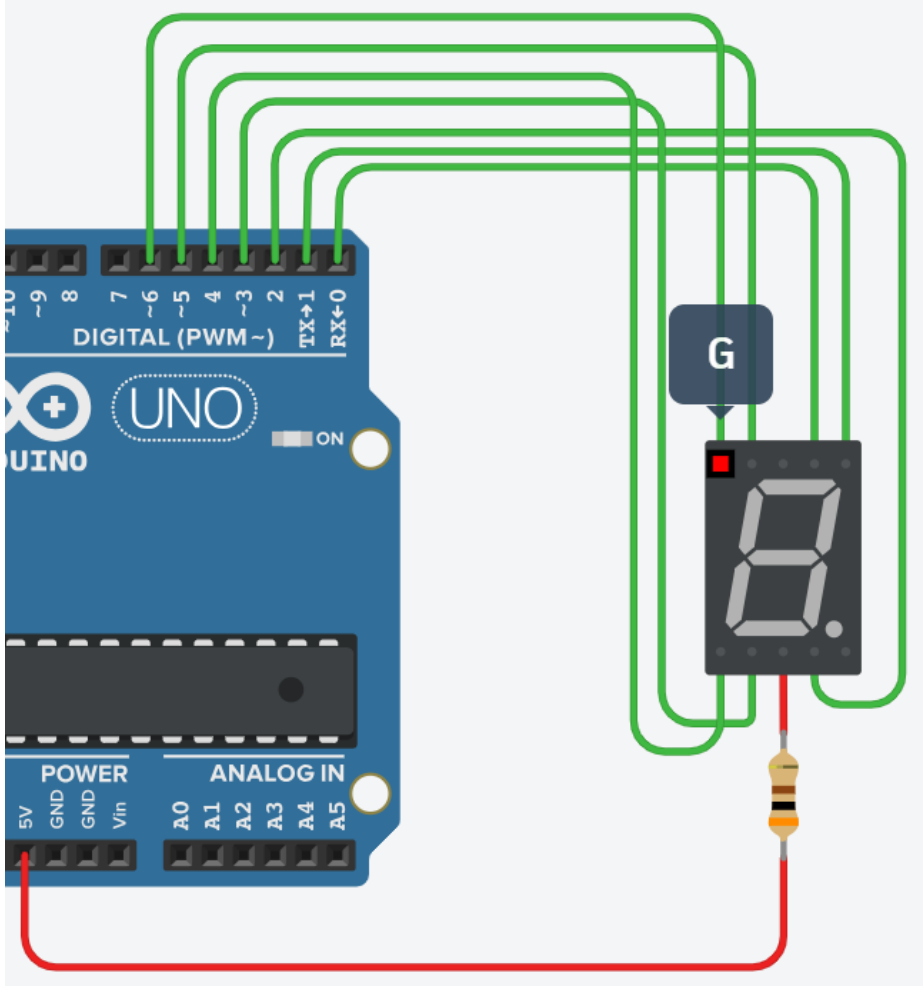

LED를 이용한 포트 제어 실험

- 7-segment 실험 QUIZ – 숫자 **4**를 표시 하시오.

```
void setup()
{
  DDRD = B[_______________] ;
}

void loop()
{
 PORTD = B[_______________]  ;
}
```

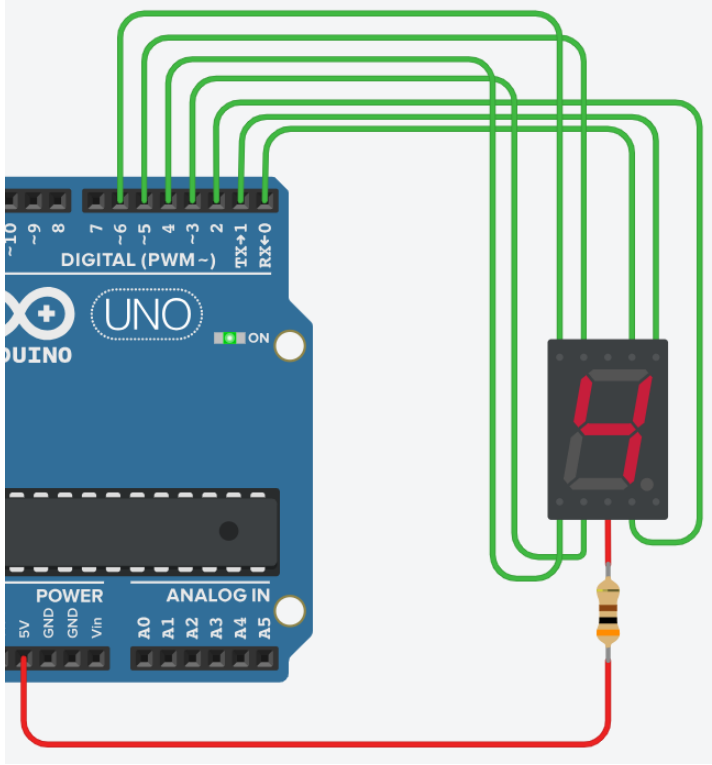

LED를 이용한 포트 제어 실험

- 7-segment 실험 QUIZ – 숫자 **4**를 표시 하시오.

```
void setup()
{
  DDRD = 0x[_____________] ;
}

Void loop()
{
 PORTD = 0x[_____________]  ;
}
```

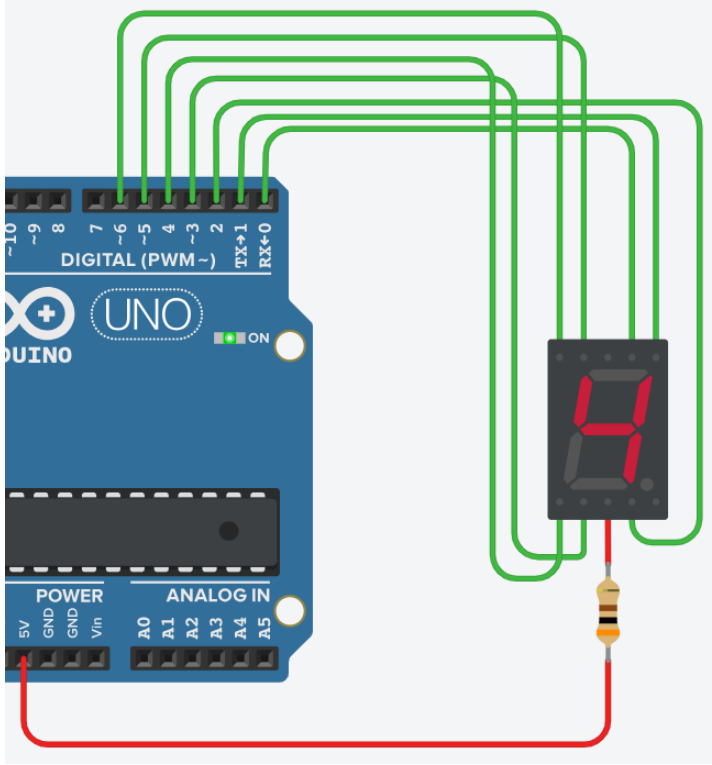

버튼 입력 실험(Digital Input)

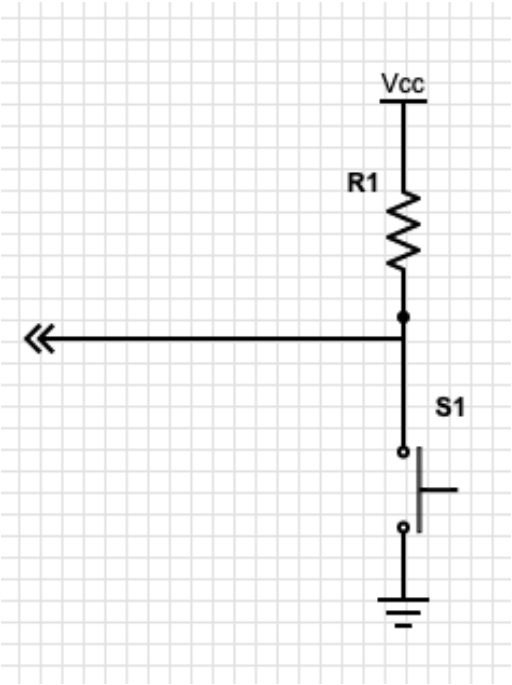

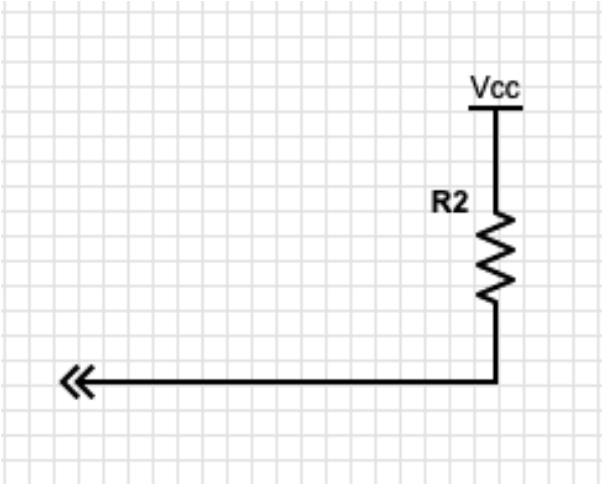

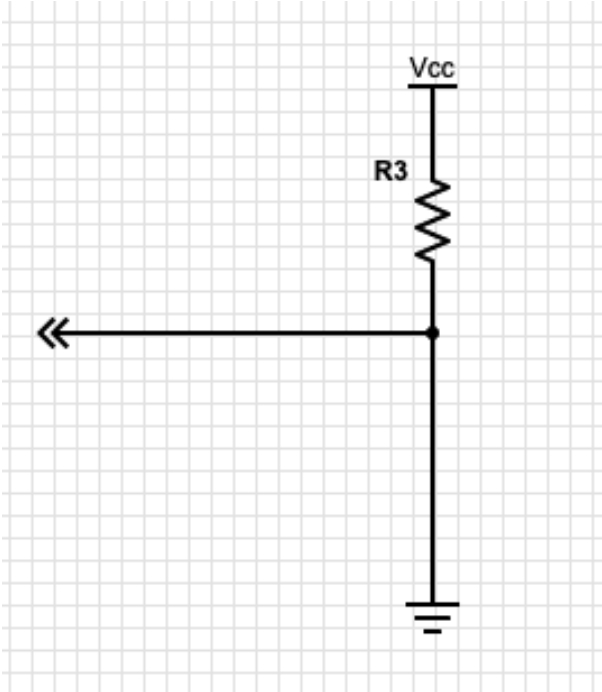

버튼 입력 실험(Digital Input)

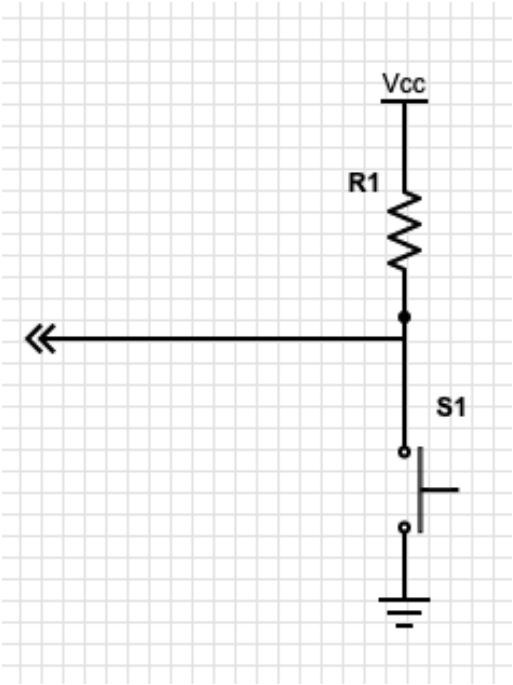

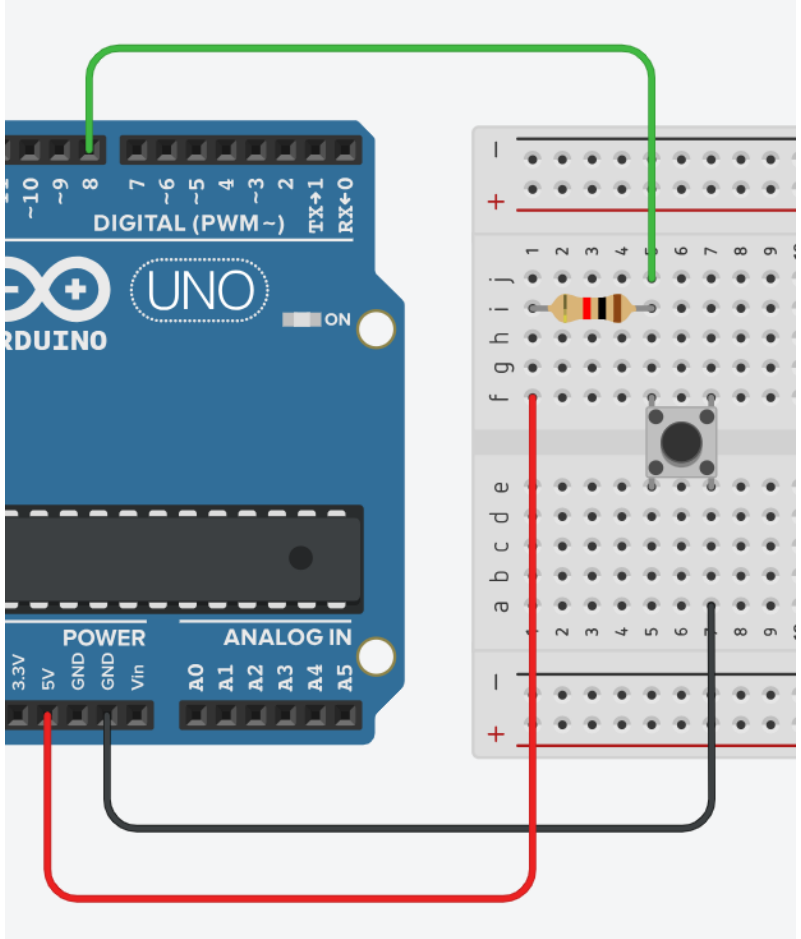

버튼 입력 실험(Digital Input)

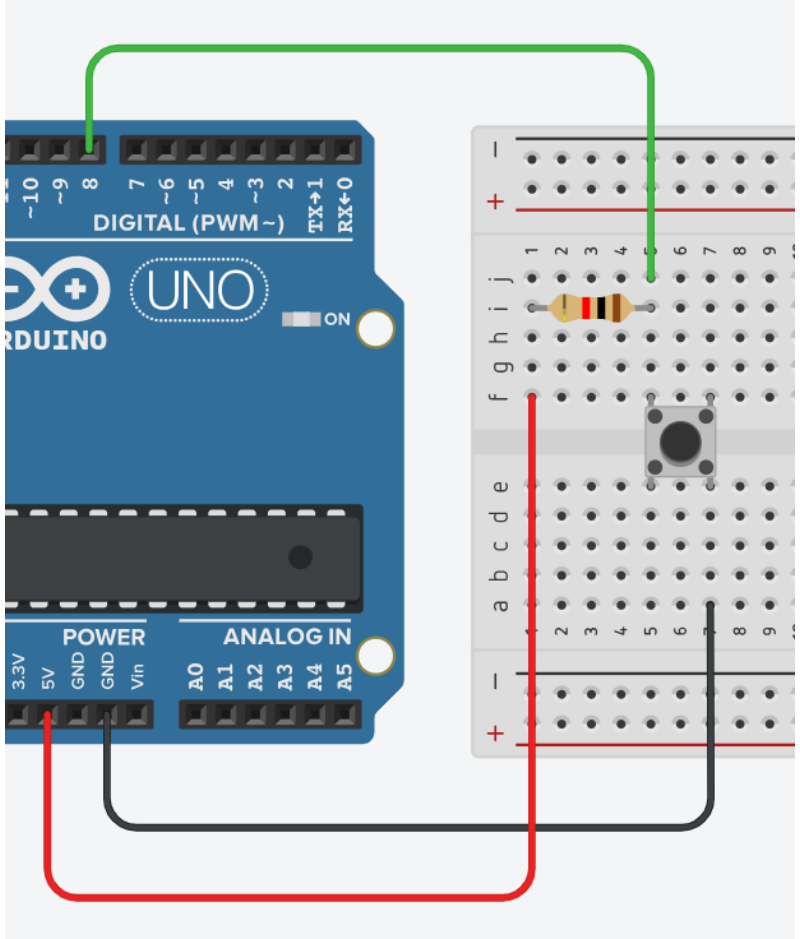

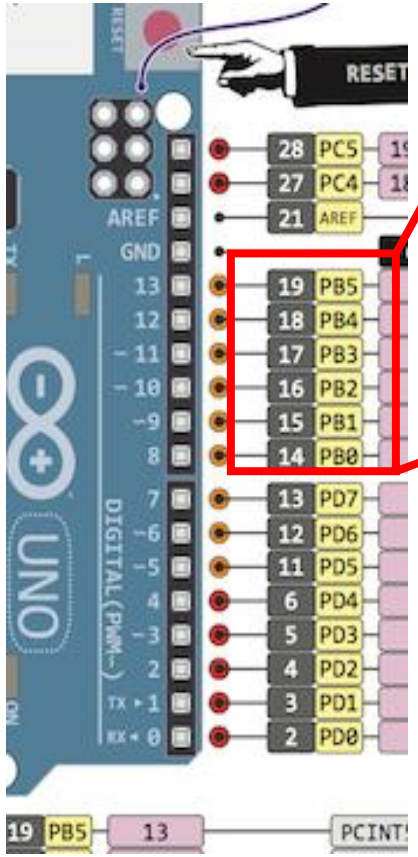

13.4.2 PORTB – The Port B Data Register

Bit	7	6	5	4	3	2	1	0	
0x05 (0x25)	PORTB7	PORTB6	PORTB5	PORTB4	PORTB3	PORTB2	PORTB1	PORTB0	PORTB
Read/Write	R/W	R/W	R/W	R/W	R/W	R/W	R/W	R/W	
Initial Value	0	0	0	0	0	0	0	0	

13.4.3 DDRB – The Port B Data Direction Register

Bit	7	6	5	4	3	2	1	0	
0x04 (0x24)	DDB7	DDB6	DDB5	DDB4	DDB3	DDB2	DDB1	DDB0	DDRB
Read/Write	R/W	R/W	R/W	R/W	R/W	R/W	R/W	R/W	
Initial Value	0	0	0	0	0	0	0	0	

13.4.4 PINB – The Port B Input Pins Address

Bit	7	6	5	4	3	2	1	0	
0x03 (0x23)	PINB7	PINB6	PINB5	PINB4	PINB3	PINB2	PINB1	PINB0	PINB
Read/Write	R	R	R	R	R	R	R	R	
Initial Value	N/A	N/A	N/A	N/A	N/A	N/A	N/A	N/A	

버튼 입력 실험(Digital Input)

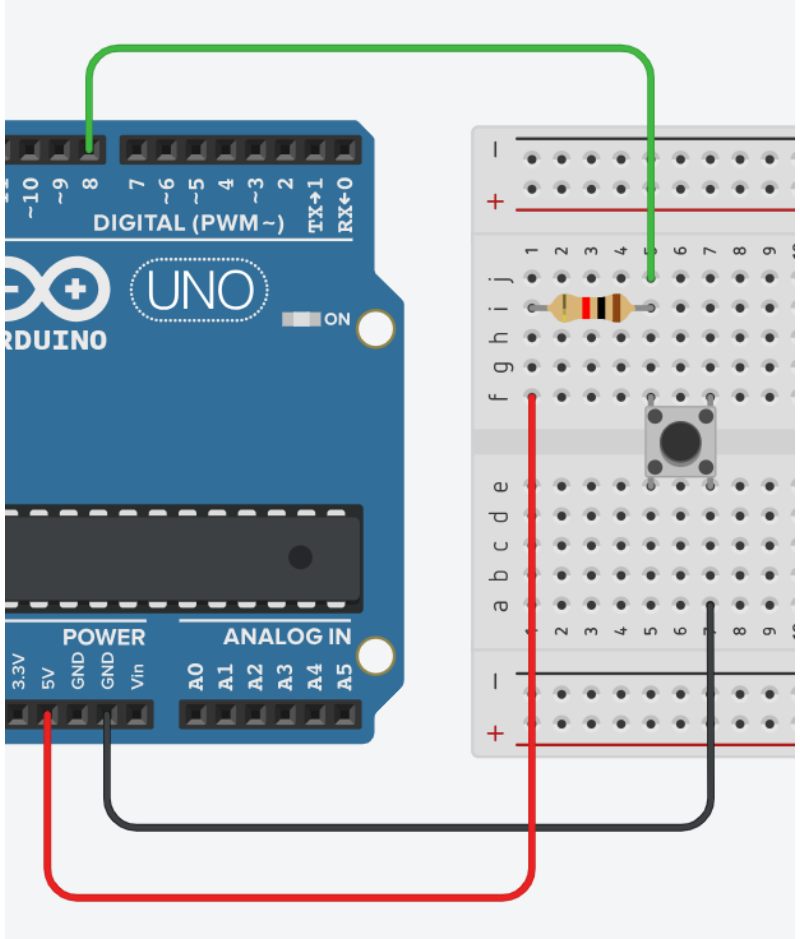


```
void setup()
{
  DDRB = B00000000 ;
  Serial.begin(9600) ;
}

void loop()
{
  Serial.println(PINB) ;
}
```

버튼 입력 실험(Digital Input)

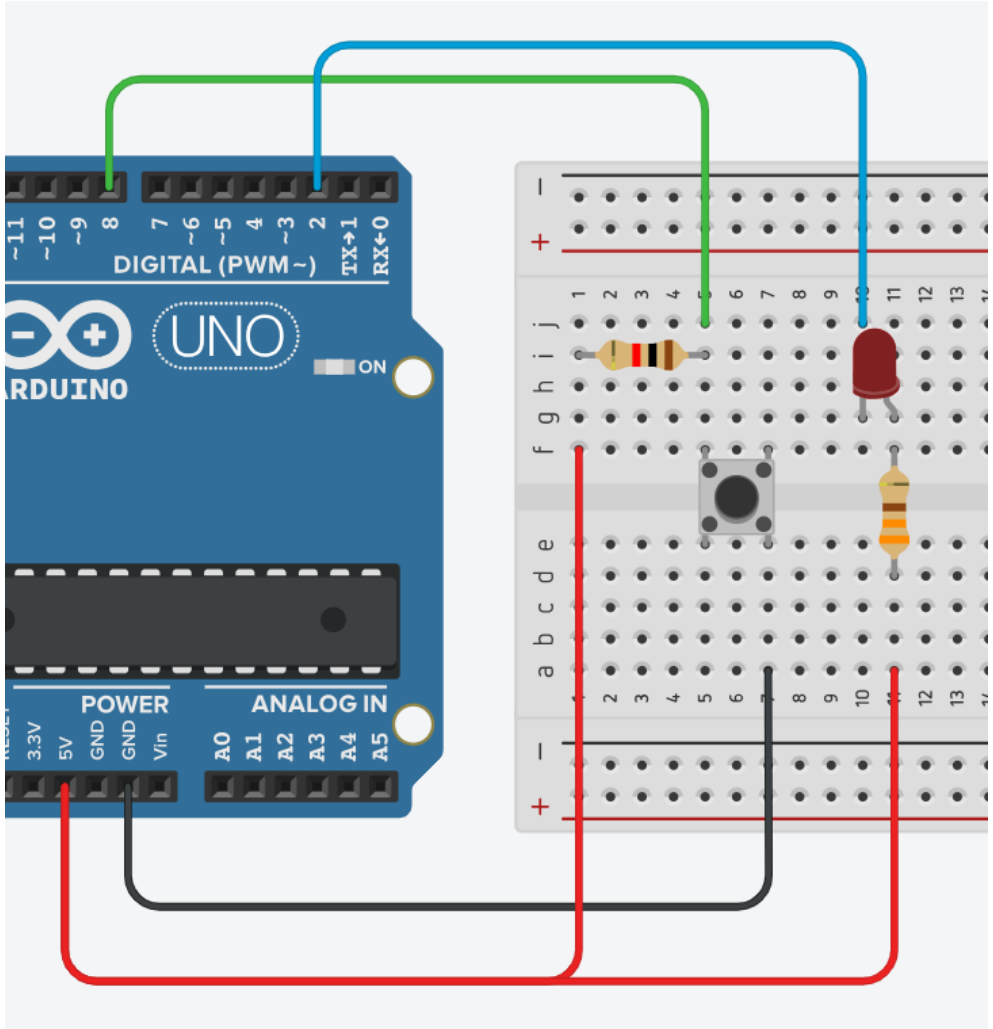

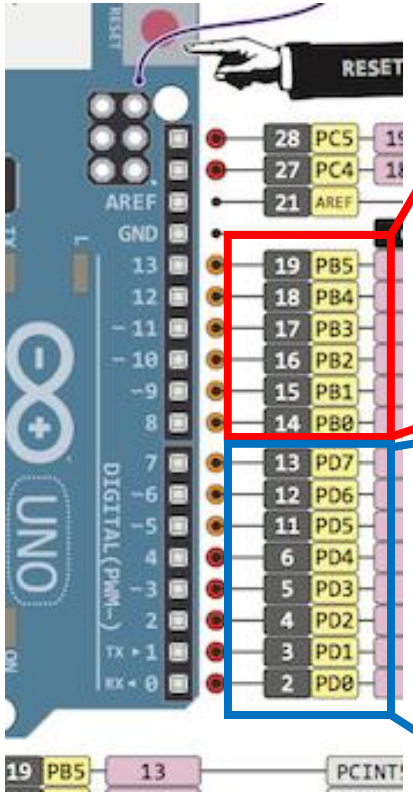

13.4.2 PORTB – The Port B Data Register

Bit	7	6	5	4	3	2	1	0	
0x05 (0x25)	PORTB7	PORTB6	PORTB5	PORTB4	PORTB3	PORTB2	PORTB1	PORTB0	PORTB
Read/Write	R/W	R/W	R/W	R/W	R/W	R/W	R/W	R/W	
Initial Value	0	0	0	0	0	0	0	0	

13.4.3 DDRB – The Port B Data Direction Register

Bit	7	6	5	4	3	2	1	0	
0x04 (0x24)	DDB7	DDB6	DDB5	DDB4	DDB3	DDB2	DDB1	DDB0	DDRB
Read/Write	R/W	R/W	R/W	R/W	R/W	R/W	R/W	R/W	
Initial Value	0	0	0	0	0	0	0	0	

13.4.4 PINB – The Port B Input Pins Address

Bit	7	6	5	4	3	2	1	0	
0x03 (0x23)	PINB7	PINB6	PINB5	PINB4	PINB3	PINB2	PINB1	PINB0	PINB
Read/Write	R	R	R	R	R	R	R	R	
Initial Value	N/A	N/A	N/A	N/A	N/A	N/A	N/A	N/A	

13.4.8 PORTD – The Port D Data Register

Bit	7	6	5	4	3	2	1	0	
0x0B (0x2B)	PORTD7	PORTD6	PORTD5	PORTD4	PORTD3	PORTD2	PORTD1	PORTD0	PORTD
Read/Write	R/W	R/W	R/W	R/W	R/W	R/W	R/W	R/W	
Initial Value	0	0	0	0	0	0	0	0	

13.4.9 DDRD – The Port D Data Direction Register

Bit	7	6	5	4	3	2	1	0	
0x0A (0x2A)	DDD7	DDD6	DDD5	DDD4	DDD3	DDD2	DDD1	DDD0	DDRD
Read/Write	R/W	R/W	R/W	R/W	R/W	R/W	R/W	R/W	
Initial Value	0	0	0	0	0	0	0	0	

13.4.10 PIND – The Port D Input Pins Address

Bit	7	6	5	4	3	2	1	0	
0x09 (0x29)	PIND7	PIND6	PIND5	PIND4	PIND3	PIND2	PIND1	PIND0	PIND
Read/Write	R	R	R	R	R	R	R	R	
Initial Value	N/A	N/A	N/A	N/A	N/A	N/A	N/A	N/A	

버튼 입력 실험(Digital Input)

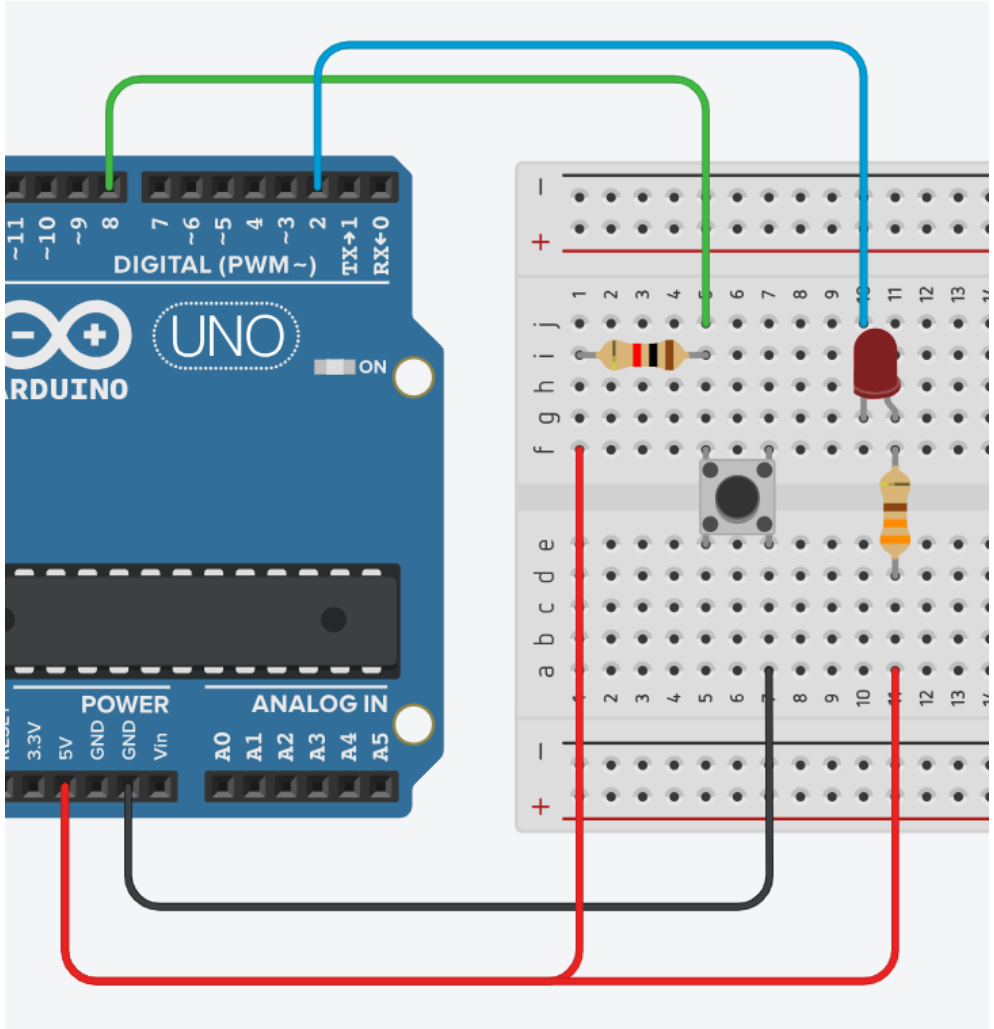


```
void setup()
{
  DDRB = B00000000 ;
  DDRD = B00000100 ;

  Serial.begin(9600) ;
}

void loop()
{
  Serial.println(PINB) ;

  if( PINB == B00000001 )
  {
    //버튼이 눌리지 않음
    PORTD = B0000100 ;          //LED 꺼짐
  }
  else
  {
    //버튼이 눌림
    PORTD = B0000000 ;          //LED 켜짐
  }
}
```