Unit-5

TRANSPORT LAYER

Dr. Yogesh Thakare

CSE(AIML)

RCOEM, Nagpur

PROCESS PROCESS-TO-PROCESS DELIVERY

- **The transport layer is responsible for process-to process delivery—the delivery of a packet, part of a message, from one process to another.**

ELEMENTS OF TRANSPORT PROTOCOLS

- The transport service is implemented by a **transport protocol** used between the two transport entities. At the data link layer, two routers communicate directly via a physical channel, whether wired or wireless, whereas at the transport layer, this physical channel is replaced by the entire network.

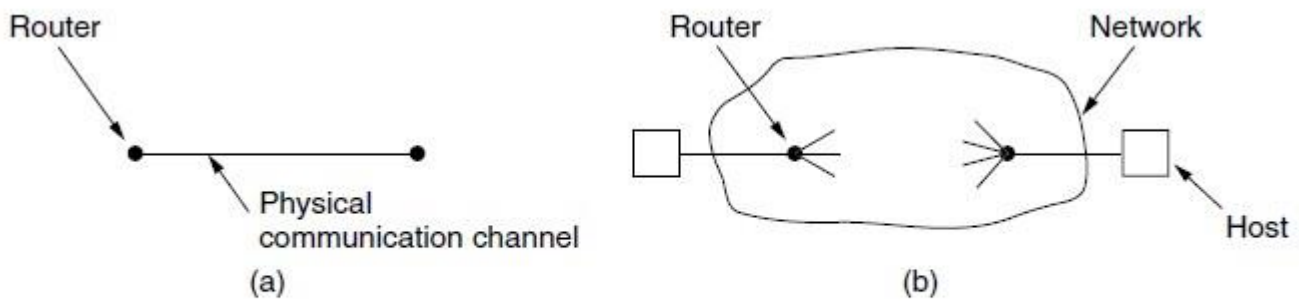

Figure 6-7. (a) Environment of the data link layer. (b) Environment of the transport layer.

Addressing

- When an application (e.g., a user) process wishes to set up a connection to a remote application process, it must specify which one to connect to. The method normally used is to define transport addresses to which processes can listen for connection requests. In the Internet, these endpoints are called
- **ports**. We will use the generic term **TSAP** (**Transport Service Access Point**) to mean a specific endpoint in the transport layer. The analogous endpoints in the network layer (i.e., network layer addresses) are not-surprisingly called **NSAPs** (**Network Service Access Points**). IP addresses are examples of NSAPs.

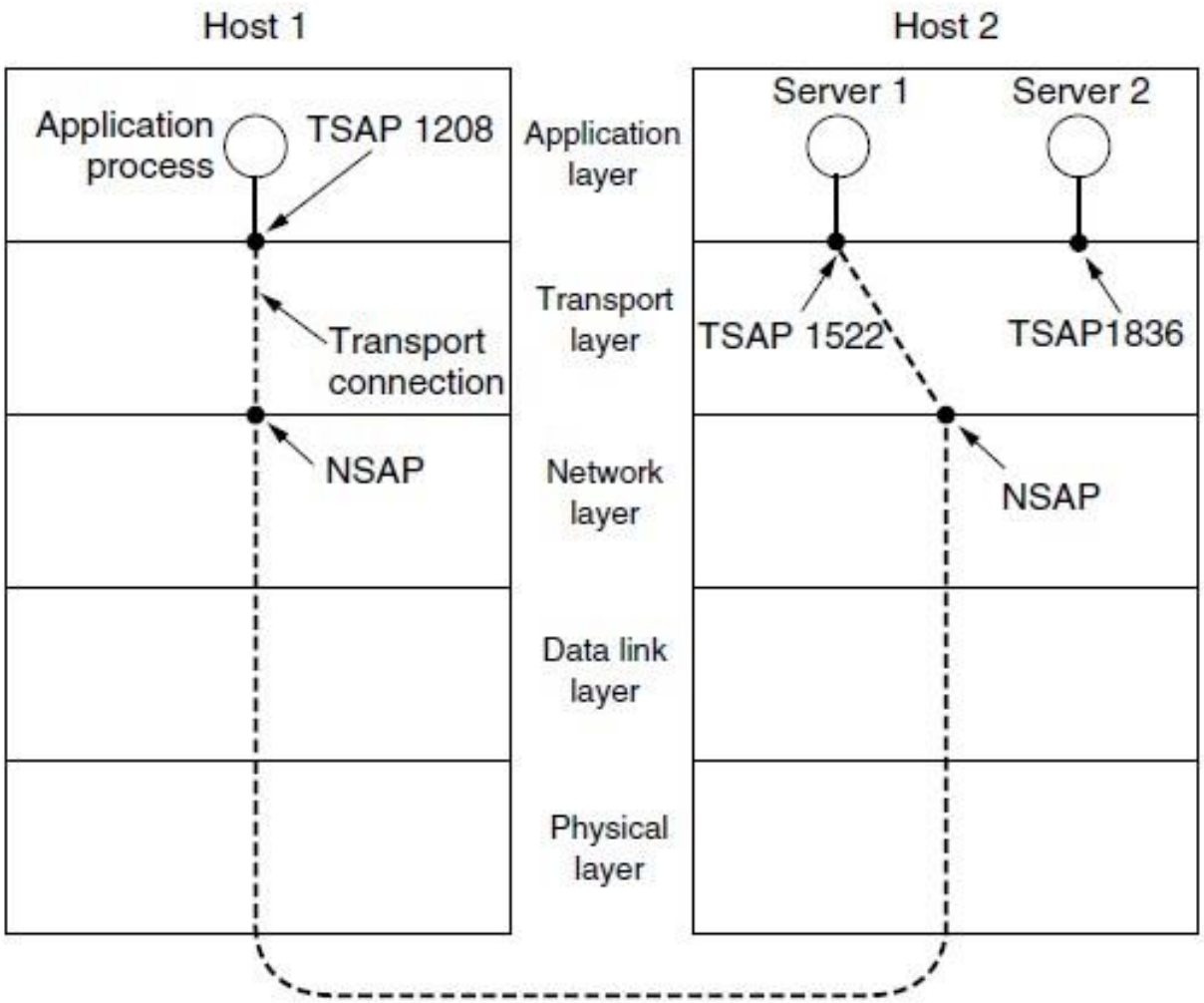

Figure 6-8. TSAPs, NSAPs, and transport connections.

- A possible scenario for a transport connection is as follows:

1. A mail server process attaches itself to TSAP 1522 on host 2 to wait for an incoming call. How a process attaches itself to a TSAP is outside the networking model and depends entirely on the local operating system. A call such as our LISTEN might be used, for example.

2. An application process on host 1 wants to send an email message, so it attaches itself to TSAP 1208 and issues a CONNECT request. The request specifies TSAP 1208 on host 1 as the source and TSAP 1522 on host 2 as the destination. This action ultimately results in a transport connection being established between the application process and the server.

3. The application process sends over the mail message.

4. The mail server responds to say that it will deliver the message.

5. The transport connection is released.

Connection Establishment

- Establishing a connection sounds easy, but it is actually surprisingly tricky. At first glance, it would seem sufficient for one transport entity to just send a CONNECTION REQUEST segment to the destination and wait for a CONNECTION ACCEPTED reply.
- The problem occurs when the network can lose, delay, corrupt, and duplicate packets. This behavior causes serious complications.

- This establishment protocol involves one peer checking with the other that the connection request is indeed current. The normal setup procedure when host 1 initiates is shown in Fig. 6-11(a). Host 1 chooses a sequence number, *x*, and sends a CONNECTION REQUEST segment containing it to host 2. Host 2 replies with an ACK segment acknowledging *x* and announcing its own initial sequence number, *y*. Finally, host 1 acknowledges host 2's choice of an initial sequence number in the first data segment that it sends.

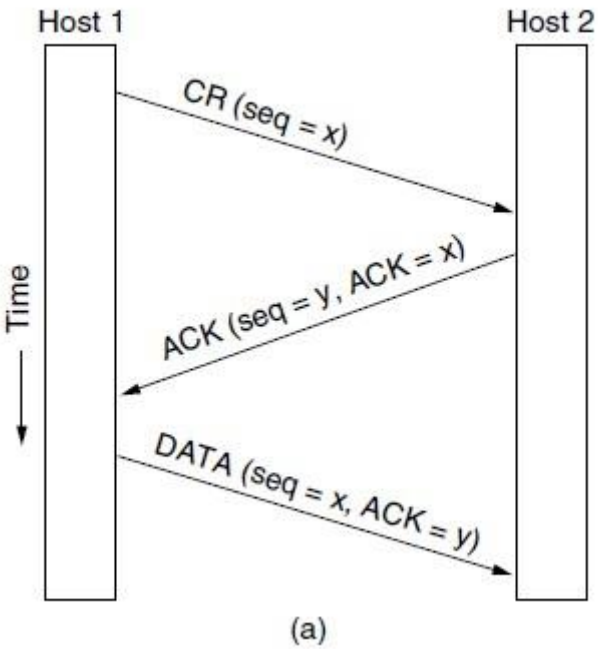

(a)

Connection Release

- Releasing a connection is easier than establishing one. Nevertheless, there are more pitfalls than one might expect here. There are two styles of terminating a connection: asymmetric release and symmetric release.
- Asymmetric release is the way the telephone system works: when one party hangs up, the connection is broken. Symmetric release treats the connection as two separate unidirectional connections and requires each one to be released separately.

- Asymmetric release is abrupt and may result in data loss. Consider the scenario of Fig. 6-12. After the connection is established, host 1 sends a segment that arrives properly at host 2. Then host 1 sends another segment. Unfortunately, host 2 issues a DISCONNECT before the second segment arrives. The result is that the connection is released and data are lost.

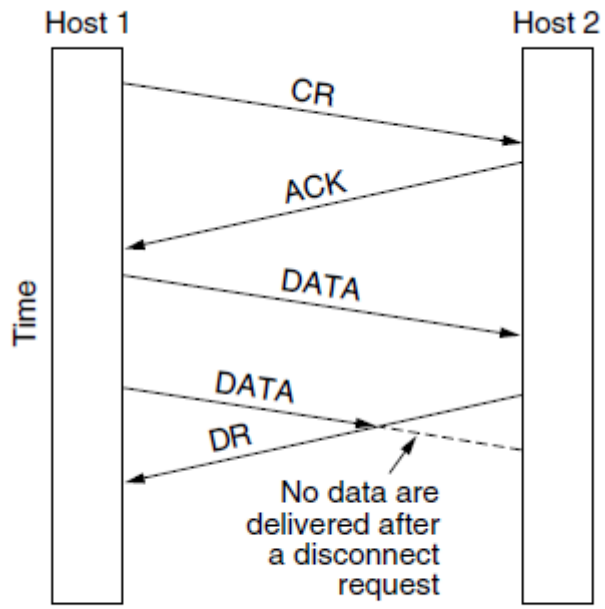

Figure 6-12. Abrupt disconnection with loss of data.

- Clearly, a more sophisticated release protocol is needed to avoid data loss. Symmetric release does the job when each process has a fixed amount of data to send and clearly knows when it has sent it. One can envision a protocol in which host 1 says ‘‘I am done. Are you done too?’’ If host 2 responds: ‘‘I am done too. Goodbye, the connection can be safely released.’’
- Unfortunately, this protocol does not always work. There is a famous problem that illustrates this issue. It is called the **two-army problem**.

Two Army Problem

- Imagine that a white army is encamped in a valley, as shown in Fig. 6-13. On both of the surrounding hillsides are blue armies. The white army is larger than either of the blue armies alone, but together the blue armies are larger than the white army. If either blue army attacks by itself, it will be defeated, but if the two blue armies attack simultaneously, they will be victorious.

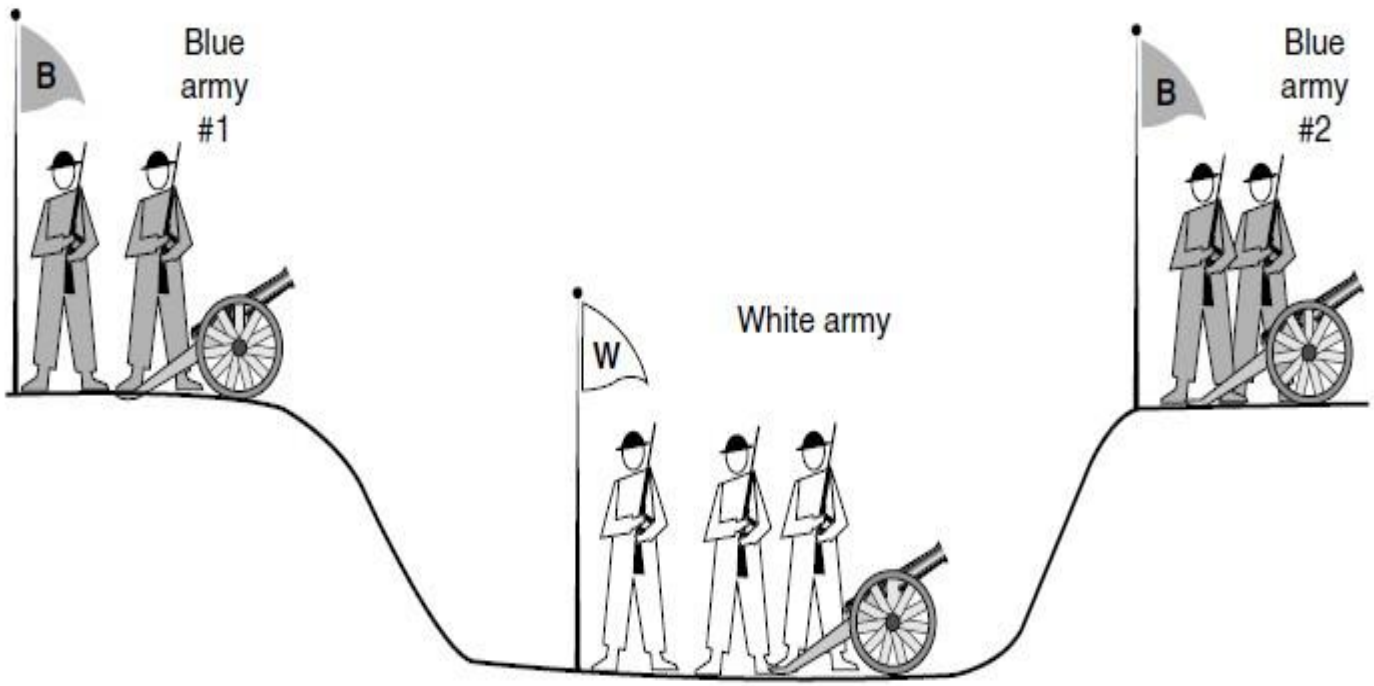

Figure 6-13. The two-army problem.

- The blue armies want to synchronize their attacks. However, their only communication medium is to send messengers on foot down into the valley, where they might be captured and the message lost. The question is: does a protocol exist that allows the blue armies to win?
- Suppose that the commander of blue army #1 sends a message reading: ‘‘I propose we attack at dawn on March 29. How about it?’’ Now suppose that the message arrives, the commander of blue army #2 agrees, and his reply gets safely back to blue army #1. Will the attack happen? Probably not, because commander #2 does not know if his reply got through. If it did not, blue army #1 will not attack, so it would be foolish for him to charge into battle.

- Now let us improve the protocol by making it a three-way handshake. The initiator of the original proposal must acknowledge the response. Assuming no messages are lost, blue army #2 will get the acknowledgement, but the commander of blue army #1 will now hesitate. After all, he does not know if his acknowledgement got through, and if it did not, he knows that blue army #2 will not attack.
- We could now make a four-way handshake protocol, but that does not help either.
- In fact, it can be proven that no protocol exists that works. Suppose that some protocol did exist. Either the last message of the protocol is essential, or it is not.

- If it is not, we can remove it (and any other unessential messages) until we are left with a protocol in which every message is essential. What happens if the final message does not get through? We just said that it was essential, so if it is lost, the attack does not take place. Since the sender of the final message can never be sure of its arrival, he will not risk attacking. Worse yet, the other blue army knows this, so it will not attack either.

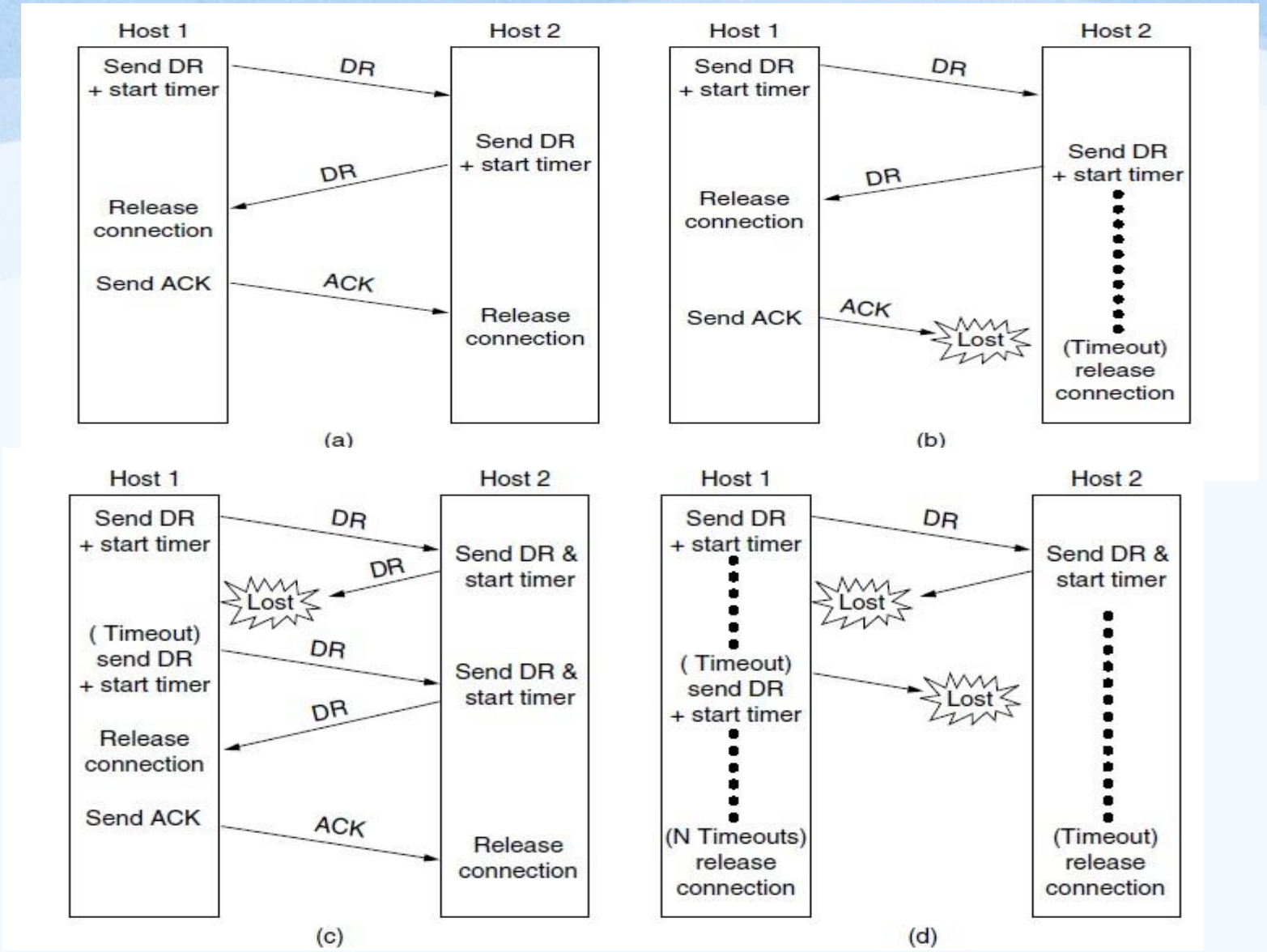

Figure 6-14. Four protocol scenarios for releasing a connection. (a) Normal case of three-way handshake. (b) Final ACK lost. (c) Response lost. (d) Response lost and subsequent DRs lost.

Crash Recovery

- If hosts and routers are subject to crashes or connections are long-lived recovery from these crashes becomes an issue. If the transport entity is entirely within the hosts, recovery from network and router crashes is straightforward. The transport entities expect lost segments all the time and know how to cope with them by using retransmissions.

- A more troublesome problem is how to recover from host crashes. In particular, it may be desirable for clients to be able to continue working when servers crash and quickly reboot.
- To illustrate the difficulty, let us assume that one host, the client, is sending a long file to another host, the file server, using a simple stop-and-wait protocol. The transport layer on the server just passes the incoming segments to the transport user, one by one. Partway through the transmission, the server crashes. When it comes back up, its tables are reinitialized, so it no longer knows precisely where it was.

- In an attempt to recover its previous status, the server might send a broadcast segment to all other hosts, announcing that it has just crashed and requesting that its clients inform it of the status of all open connections. Each client can be in one of two states: one segment outstanding, or no segments outstanding. Based on only this state information, the client must decide whether to retransmit the most recent segment.

CRASH RECOVERY

Now it seems that if TPDU is outstanding, client should transmit it, but there are can be different hidden situations.

1.if server has first sent ACK and before it can send TPDU to next layer, server crashes. In this case, client will get ACK so it will not retransmit, and TPDU is lost by server.

2.if server first sends packet to next layer, then it crashes before it can send ACK. In this case though server has already received TPDU, client thinks TPDU is lost and it will retransmit.

Server(Receiving host) can be programmed in two ways, 1. ACK first2. write first

Three events are possible at server, sending ACK(A), sending packet to next layer(W), crashing (C).

Three event can occur in six different case: AC(W) AWC C(AW),C(WA)
WAC WC(A)

Client(sending host) can be programmed in four ways, 1. always retransmit last TPDU, 2. never retransmit last TPDU, 3. retransmit only in S0, 4. retransmit only

Crash Recovery

Strategy used by sending host	Strategy used by receiving host: First ACK, then write			Strategy used by receiving host: First write, then ACK		
	AC(W)	AWC	C(AW)	C(WA)	W AC	WC(A)
Always retransmit	OK	DUP	OK	OK	DUP	DUP
Never retransmit	LOST	OK	LOST	LOST	OK	OK
Retransmit in S0	OK	DUP	LOST	LOST	DUP	OK
Retransmit in S1	LOST	OK	OK	OK	OK	DUP

OK = Protocol functions correctly
DUP = Protocol generates a duplicate message
LOST = Protocol loses a message

Different combinations of client and server strategy.

USER DATAGRAM PROTOCOL (UDP)

- The User Datagram Protocol (UDP) is called a connectionless, unreliable transport protocol. It does not add anything to the services of IP except to provide process-to process communication instead of host-to-host communication. Also, it performs very limited error checking.
- If UDP is so powerless, why would a process want to use it? With the disadvantages come some advantages. UDP is a very simple protocol using a minimum of overhead. If a process wants to send a small message and does not care much about reliability, it can use UDP. Sending a small message by using UDP takes much less interaction between the sender and receiver than using TCP or SCTP ***Stream Control Transmission Protocol*.**

UDP Frame format

- UDP packets, called user datagrams, have a fixed-size header of 8 bytes. Figure shows the format of a user datagram.

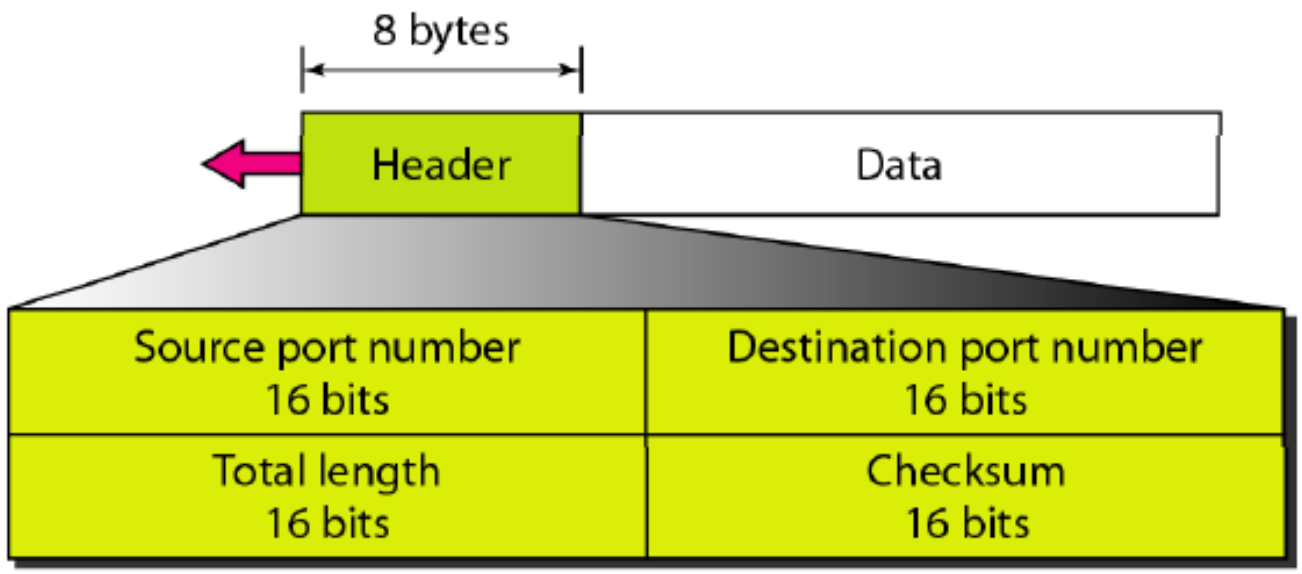

- The fields are as follows:
- Source port number:- This is the port number used by the process running on the source host. It is 16 bits long, which means that the port number can range from 0 to 65,535.
- If the source host is the client (a client sending a request), the port number, in most cases, is an ephemeral port number requested by the process and chosen by the UDP software running on the source host. If the source host is the server (a server sending a response), the port number, in most cases, is a well-known port number.

- Destination port number:- This is the port number used by the process running on the destination host. It is also 16 bits long. If the destination host is the server (a client sending a request), the port number, in most cases, is a well-known port number.
- Length:- This is a 16-bit field that defines the total length of the user datagram, header plus data. The 16 bits can define a total length of 0 to 65,535 bytes. However, the total length needs to be much less because a UDP user datagram is stored in an IP datagram with a total length of 65,535 bytes.
- **Checksum:-** This field is used to detect errors over the entire user datagram.

- **TCP**
- The second transport layer protocol we discuss in this chapter is called Transmission Control Protocol (TCP). TCP, like UDP, is a process-to-process (program-to-program) protocol.
- TCP, therefore, like UDP, uses port numbers. Unlike UDP, TCP is a connection oriented protocol; it creates a virtual connection between two TCPs to send data. In addition, TCP uses flow and error control mechanisms at the transport level.

TCP Frame Format

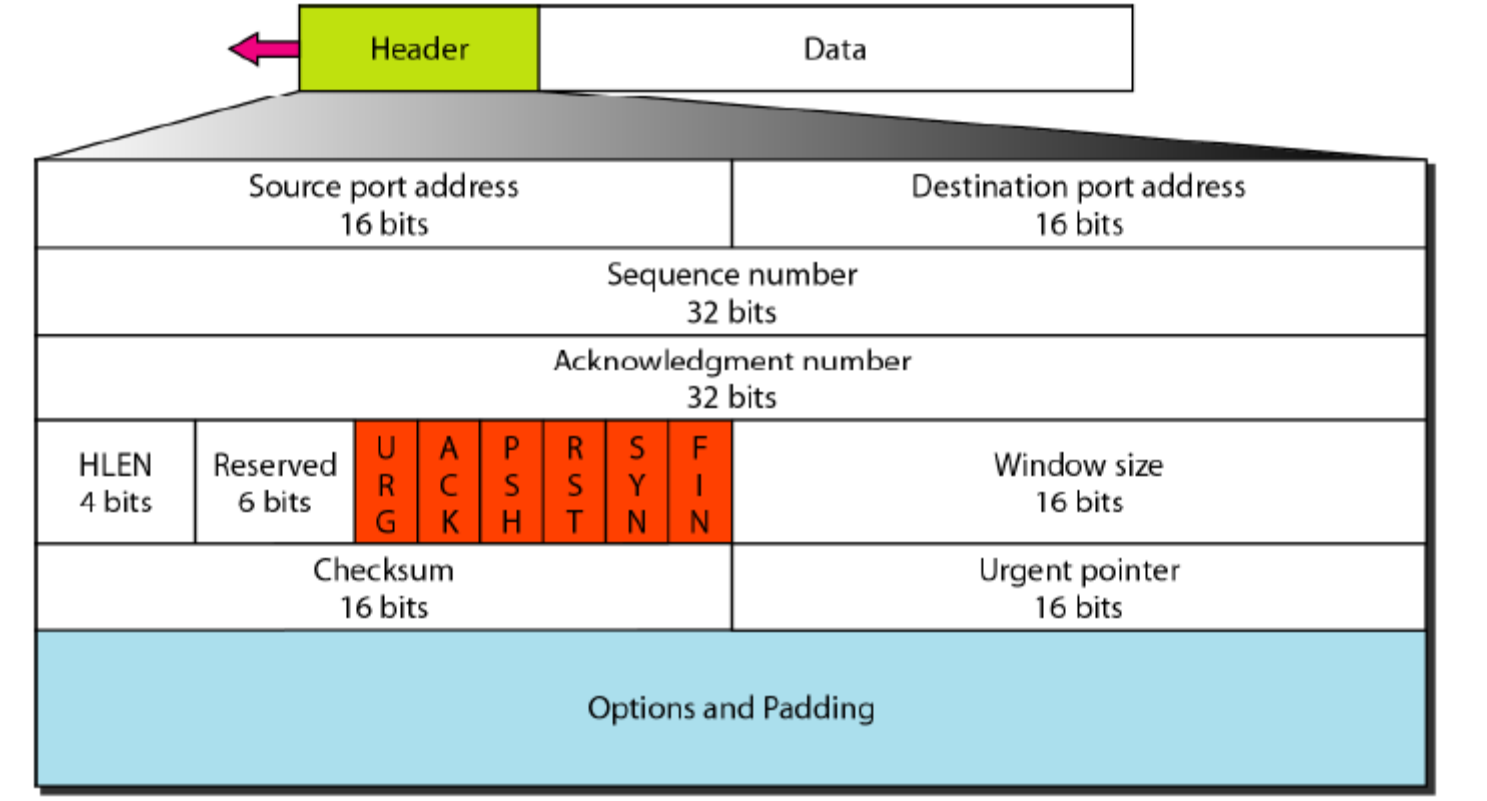

- The segment consists of a 20- to 60-byte header, followed by data from the application program. The header is 20 bytes if there are no options and up to 60 bytes if it contains options.
- Source port address. This is a 16-bit field that defines the port number of the application program in the host that is sending the segment. This serves the same purpose as the source port address in the UDP header.
- Destination port address. This is a 16-bit field that defines the port number of the application program in the host that is receiving the segment. This serves the same purpose as the destination port address in the UDP header.

Byte Number TCP numbers all data bytes that are transmitted in a connection. Numbering is independent in each direction. When TCP receives bytes of data from a process, it stores them in the sending buffer and numbers them. The numbering does not necessarily start from 0. Instead, TCP generates a random number between 0 and $2^{32} - 1$ for the number of the first byte. For example, if the random number happens to be 1057 and the total data to be sent are 6000 bytes, the bytes are numbered from 1057 to 7056. We will see that byte numbering is used for flow and error control.

The bytes of data being transferred in each connection are numbered by TCP. The numbering starts with a randomly generated number.

Sequence Number After the bytes have been numbered, TCP assigns a sequence number to each segment that is being sent. The sequence number for each segment is the number of the first byte carried in that segment.

Example 23.3

Suppose a TCP connection is transferring a file of 5000 bytes. The first byte is numbered 10,001. What are the sequence numbers for each segment if data are sent in five segments, each carrying 1000 bytes?

Solution

The following shows the sequence number for each segment:

Segment 1	Sequence Number: 10,001 (range: 10,001 to 11,000)
Segment 2	Sequence Number: 11,001 (range: 11,001 to 12,000)
Segment 3	Sequence Number: 12,001 (range: 12,001 to 13,000)
Segment 4	Sequence Number: 13,001 (range: 13,001 to 14,000)
Segment 5	Sequence Number: 14,001 (range: 14,001 to 15,000)

- Sequence number:- This 32-bit field defines the number assigned to the first byte of data contained in this segment. As we said before, TCP is a stream transport protocol. To ensure connectivity, each byte to be transmitted is numbered. The sequence number tells the destination which byte in this sequence comprises the first byte in the segment. During connection establishment, each party uses a random number generator to create an initial sequence number (ISN), which is usually different in each direction.

- Acknowledgment number. This 32-bit field defines the byte number that the receiver of the segment is expecting to receive from the other party. If the receiver of the segment has successfully received byte number *x from the other party, it* defines *x +1 as the acknowledgment number. Acknowledgment and data can be* piggybacked together.
- Header length. This 4-bit field indicates the number of 4-byte words in the TCP header. The length of the header can be between 20 and 60 bytes. Therefore, the value of this field can be between 5 (5 x 4 =20) and 15 (15 x 4 =60).

- Reserved. This is a 6-bit field reserved for future use.
- Control. This field defines 6 different control bits or flags as shown in Figure 23.17. One or more of these bits can be set at a time.

Table 23.3 *Description offlags in the controlfield*

Flag	*Description*
URG	The value of the urgent pointer field is valid.
ACK	The value of the acknowledgment field is valid.
PSH	Push the data.
RST	Reset the connection.
SYN	Synchronize sequence numbers during connection.
FIN	Terminate the connection.

- Window size. This field defines the size of the window, in bytes, that the other party must maintain. Note that the length of this field is 16 bits, which means that the maximum size of the window is 65,535 bytes.
- Checksum. This 16-bit field contains the checksum. The calculation of the checksum for TCP follows the same procedure as the one described for UDP. However, the inclusion of the checksum in the UDP datagram is optional, whereas the inclusion of the checksum for TCP is mandatory.
- Urgent pointer. This l6-bit field, which is valid only if the urgent flag is set, is used when the segment contains urgent data. It defines the number that must be added to the sequence number to obtain the number of the last urgent byte in the data section of the segment.

- Options. There can be up to 40 bytes of optional information in the TCP header.

Congestion Control and Quality of Service

- Congestion control and quality of service are two issues so closely bound together that improving one means improving the other and ignoring one usually means ignoring the other. Most techniques to prevent or eliminate congestion also improve the quality of service in a network.
- The main focus of congestion control and quality of service is data traffic. In congestion control we try to avoid traffic congestion. In quality of service, we try to create an appropriate environment for the traffic. So, before talking about congestion control and quality of service, we discuss the data traffic itself.

Traffic Descriptor

- Traffic descriptors are qualitative values that represent a data flow.

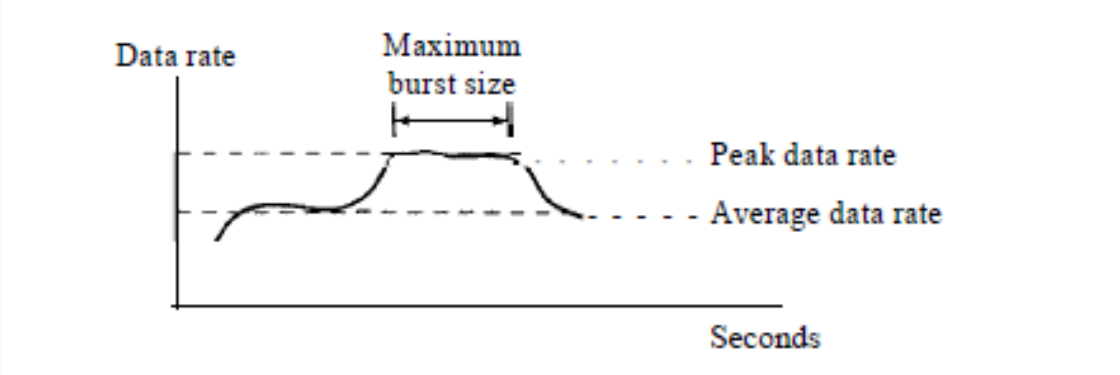

Average Data Rate

The average data rate is the number of bits sent during a period of time, divided by the number of seconds in that period. We use the following equation:

Average data rate =amount of data/time

The average data rate is a very useful characteristic of traffic because it indicates the average bandwidth needed by the traffic.

- *Peak Data Rate*
- The peak data rate defines the maximum data rate of the traffic.
- *Maximum Burst Size*
- Although the peak data rate is a critical value for the network, it can usually be ignored if the duration of the peak value is very short.
- *Effective Bandwidth*
- The effective bandwidth is the bandwidth that the network needs to allocate for the flow of traffic. The effective bandwidth is a function of three values: average data rate, peak data rate, and maximum burst size.

CONGESTION

- An important issue in a packet-switched network is **congestion.**
- **Congestion in a network** may occur if the **load on the network-the number of packets sent to the network-is** greater than the *capacity of the network-the number of packets a network can handle.*
- **Congestion control refers to the mechanisms and techniques to control the congestion** and keep the load below the capacity.

- Congestion in a network or internetwork occurs because routers and switches have queues-buffers that hold the packets before and after processing.
- Network Performance
- Congestion control involves two factors that measure the performance of a network: *delay* and *throughput*.

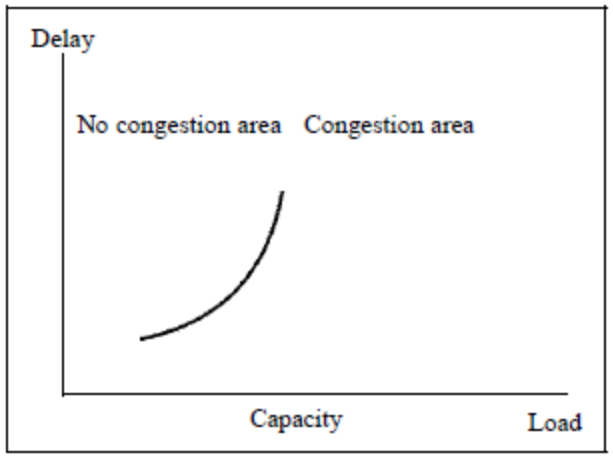

a. Delay as a function of load

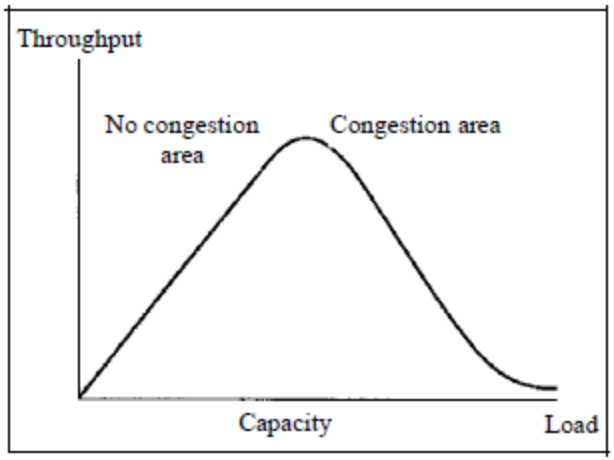

b. Throughput as a function of load

Delay Versus Load

- Note that when the load is much less than the capacity of the network, the delay is at a minimum. This minimum delay is composed of propagation delay and processing delay, both of which are negligible.
- However, when the load reaches the network capacity, the delay increases sharply because we now need to add the waiting time in the queues (for all routers in the path) to the total delay. Note that the delay becomes infinite when the load is greater than the capacity.

Throughput Versus Load

- We can define throughput in a network as the number of packets passing through the network in a unit of time. Notice that when the load is below the capacity of the network, the throughput increases proportionally with the *load*.
- *We expect the* throughput to remain constant after the load reaches the capacity, but instead the throughput declines sharply. The reason is the discarding of packets by the routers.

CONGESTION CONTROL

- Congestion control refers to techniques and mechanisms that can either prevent congestion, before it happens, or remove congestion, after it has happened. In general, we can divide congestion control mechanisms into two broad categories: open-loop congestion control (prevention) and closed-loop congestion control (removal).

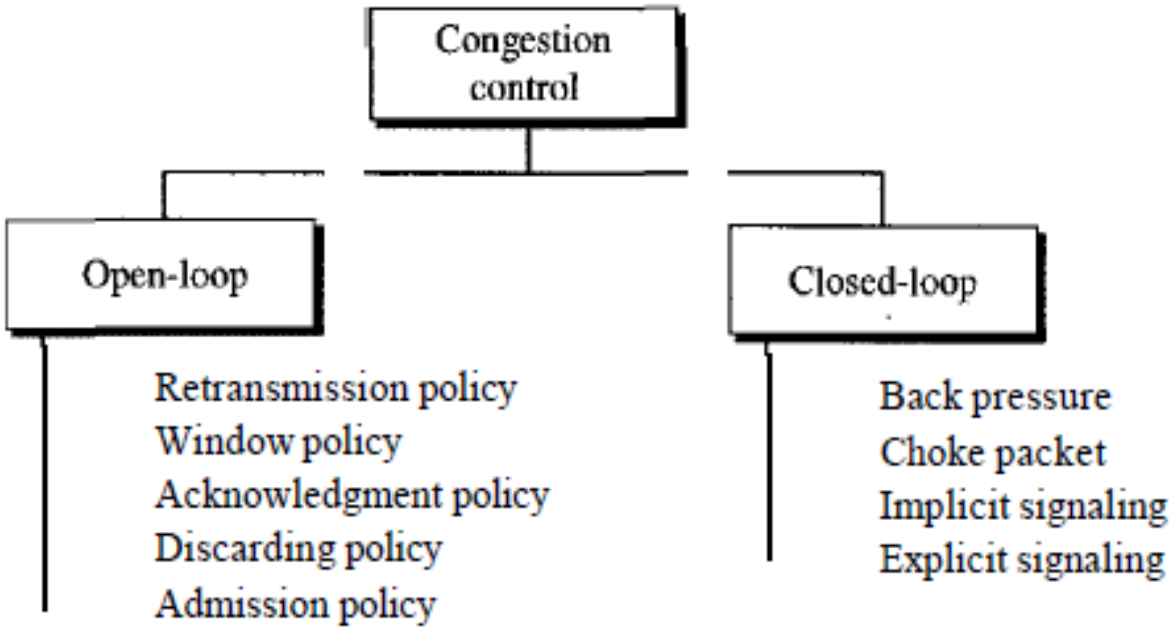

Open-Loop Congestion Control

- *Retransmission Policy*
- Retransmission is sometimes unavoidable. If the sender feels that a sent packet is lost or corrupted, the packet needs to be retransmitted.
- Retransmission in general may increase congestion in the network. However, a good retransmission policy can prevent congestion.
- The retransmission policy and the retransmission timers must be designed to optimize efficiency and at the same time prevent congestion.

- Window Policy
- The type of window at the sender may also affect congestion. The Selective Repeat window is better than the Go-Back-N window for congestion control. In the *Go-Back-N* window, when the timer for a packet times out, several packets may be resent, although some may have arrived safe and sound at the receiver.
- *Acknowledgment Policy*
- The acknowledgment policy imposed by the receiver may also affect congestion. If the receiver does not acknowledge every packet it receives, it may slow down the sender and help prevent congestion.

- *Discarding Policy*
- A good discarding policy by the routers may prevent congestion and at the same time may not harm the integrity of the transmission. For example, in audio transmission, if the policy is to discard less sensitive packets when congestion is likely to happen, the quality of sound is still preserved and congestion is prevented or alleviated.
- *Admission Policy*
- An admission policy, which is a quality-of-service mechanism, can also prevent congestion in virtual-circuit networks. Switches in a flow first check the resource requirement of a flow before admitting it to the network.

Closed-Loop Congestion Control

- Closed-loop congestion control mechanisms try to alleviate congestion after it happens.
- *Backpressure*
- The technique of *backpressure* refers to a congestion control mechanism in which a congested node stops receiving data from the immediate upstream node or nodes. This may cause the upstream node or nodes to become congested, and they, in turn, reject data from their upstream nodes or nodes. And so on.

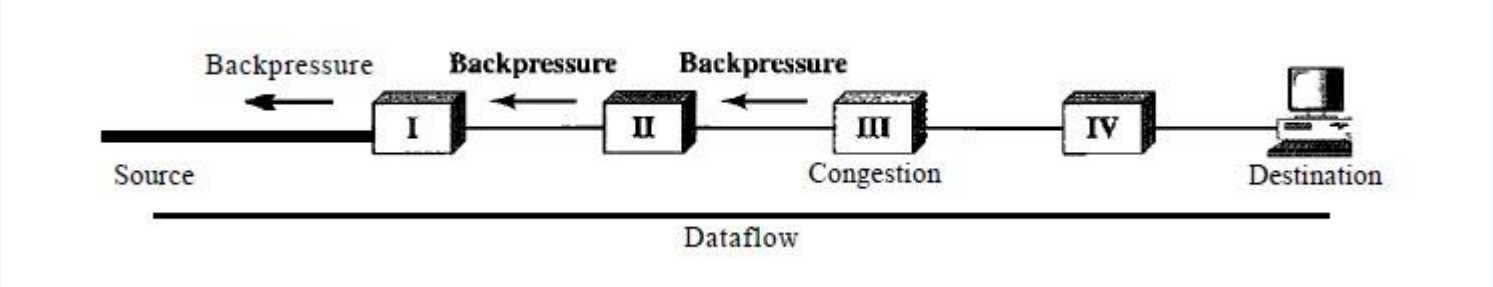

- *Choke Packet*

- A choke packet is a packet sent by a node to the source to inform it of congestion. Note the difference between the backpressure and choke packet methods. In backpressure, the warning is from one node to its upstream node, although the warning may eventually reach the source station. In the choke packet method, the warning is from the router, which has encountered congestion, to the source station directly. The intermediate nodes through which the packet has traveled are not warned.

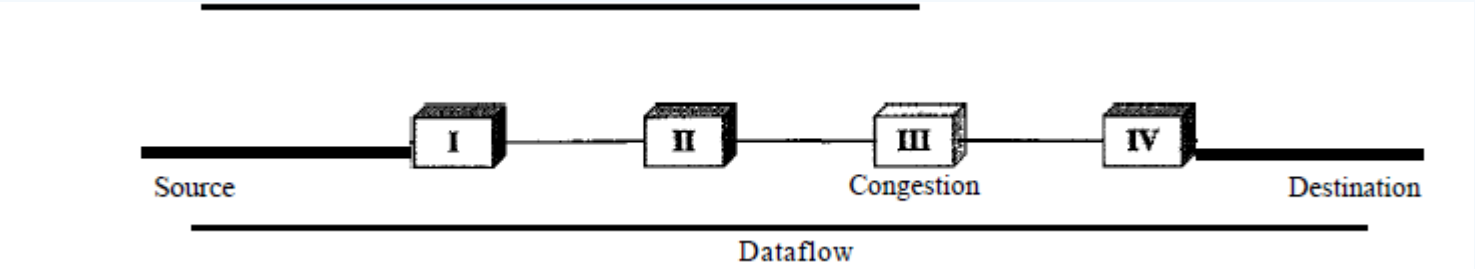

- *Implicit Signaling*
- In implicit signaling, there is no communication between the congested node or nodes and the source. The source guesses that there is a congestion somewhere in the network from other symptoms.
- *Explicit Signaling*
- The node that experiences congestion can explicitly send a signal to the source or destination. The explicit signaling method, however, is different from the choke packet method.

QUALITY OF SERVICE

- Quality of service (QoS) is an internetworking issue that has been discussed more than defined.
- Flow Characteristics
- Traditionally, four types of characteristics are attributed to a flow: reliability, delay, jitter, and bandwidth, as shown in Figure

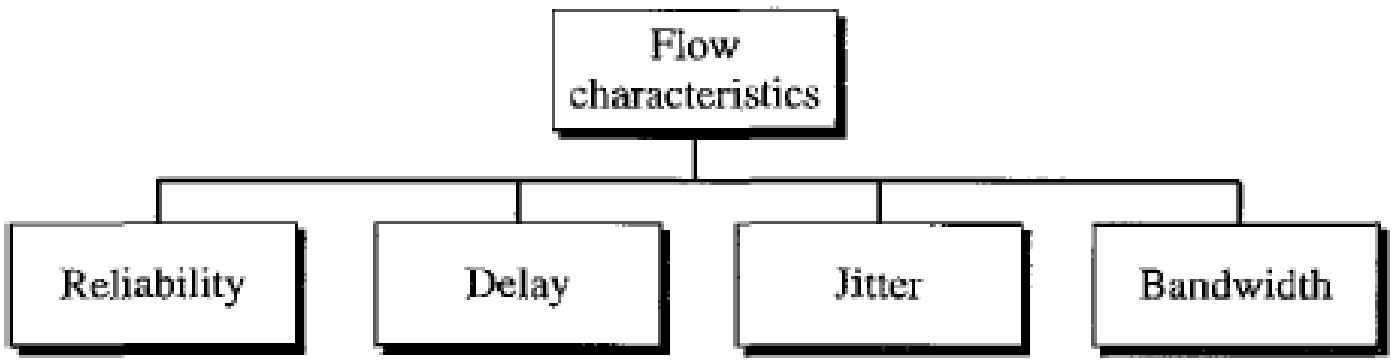

- *Reliability*
- Reliability is a characteristic that a flow needs. Lack of reliability means losing a packet or acknowledgment, which entails retransmission. For example, it is more important that electronic mail, file transfer, and Internet access have reliable transmissions than telephony or audio conferencing.
- *Delay*
- Source-to-destination delay is another flow characteristic. Again applications can tolerate delay in different degrees. In this case, telephony, audio conferencing, video conferencing, and remote log-in need minimum delay, while delay in file transfer or e-mail is less important.

- Jitter
- Jitter is the variation in delay for packets belonging to the same flow. For example, if four packets depart at times 0, 1, 2, 3 and arrive at 20, 21, 22, 23, all have the same delay, 20 units of time.
- On the other hand, if the above four packets arrive at 21, 23, 21, and 28, they will have different delays: 21,22, 19, and 24. For applications such as audio and video, the first case is completely acceptable; the second case is not.
- *Bandwidth*
- Different applications need different bandwidths. In video conferencing we need to send millions of bits per second to refresh a color screen while the total number of bits in an e-mail may not reach even a million.

TECHNIQUES TO IMPROVE QoS

- In this section, we discuss some techniques that can be used to improve the quality of service. We briefly discuss four common methods: scheduling, traffic shaping, admission control, and resource reservation.
- Scheduling
- Packets from different flows arrive at a switch or router for processing. A good scheduling technique treats the different flows in a fair and appropriate manner. Several scheduling techniques are designed to improve the quality of service. We discuss three of them here: FIFO queuing, priority queuing, and weighted fair queuing.

- *FIFO Queuing*
- In first-in, first-out (FIFO) queuing, packets wait in a buffer (queue) until the node (router or switch) is ready to process them. If the average arrival rate is higher than the average processing rate, the queue will fill up and new packets will be discarded.
- *Priority Queuing*
- In priority queuing, packets are first assigned to a priority class. Each priority class has its own queue. The packets in the highest-priority queue are processed first. Packets in the lowest-priority queue are processed last.

- *Weighted Fair Queuing*
- A better scheduling method is weighted fair queuing. In this technique, the packets are still assigned to different classes and admitted to different queues. The queues, however, are weighted based on the priority of the queues; higher priority means a higher weight.

Traffic Shaping

- Traffic shaping is a mechanism to control the amount and the rate of the traffic sent to the network. Two techniques can shape traffic: leaky bucket and token bucket.
- *Leaky Bucket*
- If a bucket has a small hole at the bottom, the water leaks from the bucket at a constant rate as long as there is water in the bucket. The rate at which the water leaks does not depend on the rate at which the water is input to the bucket unless the bucket is empty. The input rate can vary, but the output rate remains constant. Similarly, in networking, a technique called leaky bucket can smooth out bursty traffic. Bursty chunks are stored in the bucket and sent out at an average rate.

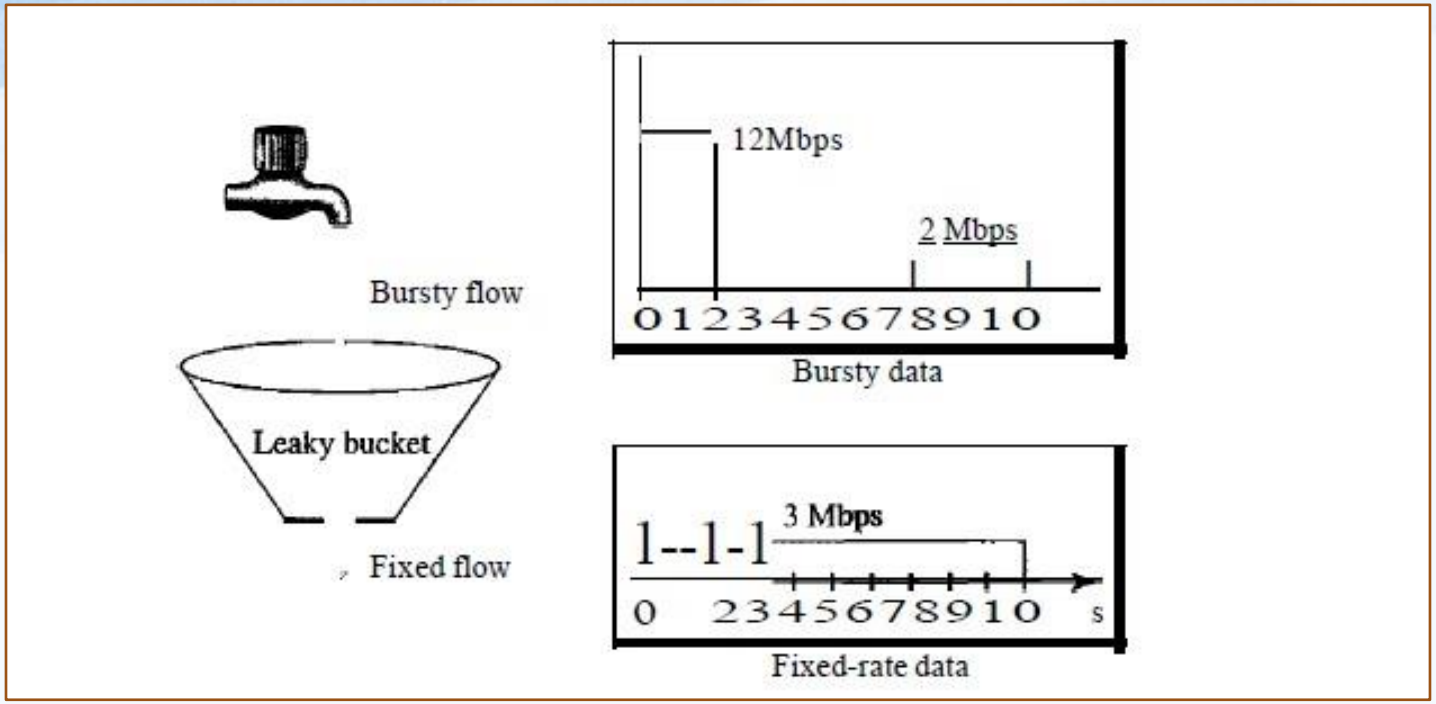

In the figure, we assume that the network has committed a bandwidth of 3 Mbps for a host. The use of the leaky bucket shapes the input traffic to make it conform to this commitment.

- In Figure the host sends a burst of data at a rate of 12 Mbps for 2s, for a total of 24 Mbits of data. The host is silent for 5s and then sends data at a rate of 2 Mbps for 3s, for a total of 6 Mbits of data. In all, the host has sent 30 Mbits of data in 10s.
- The leaky bucket smooths the traffic by sending out data at a rate of 3 Mbps during the same 10 s. Without the leaky bucket, the beginning burst may have hurt the network by consuming more bandwidth than is set aside for this host. We can also see that the leaky bucket may prevent congestion.
- As an analogy, consider the freeway during rush hour (bursty traffic). If, instead, commuters could stagger their working hours, congestion on our freeways could be avoided.

Token Bucket

- The leaky bucket is very restrictive. It does not credit an idle host. For example, if a host is not sending for a while, its bucket becomes empty. Now if the host has bursty data, the leaky bucket allows only an average rate. The time when the host was idle is not taken into account. On the other hand, the token bucket algorithm allows idle hosts to accumulate credit for the future in the form of tokens.
- For each tick of the clock, the system sends *n* tokens to the bucket. The system removes one token for every cell (or byte) of data sent.

- For each tick of the clock, the system sends *n* tokens to the bucket. The system removes one token for every cell (or byte) of data sent. For example, if *n* is 100 and the host is idle for 100 ticks, the bucket collects 10,000 tokens.
- Now the host can consume all these tokens in one tick with 10,000 cells, or the host takes 1000 ticks with 10 cells per tick. In other words, the host can send bursty data as long as the bucket is not empty.

- The token bucket can easily be implemented with a counter. The token is initialized to zero. Each time a token is added, the counter is incremented by 1. Each time a unit of data is sent, the counter is decremented by 1. When the counter is zero, the host cannot send data.

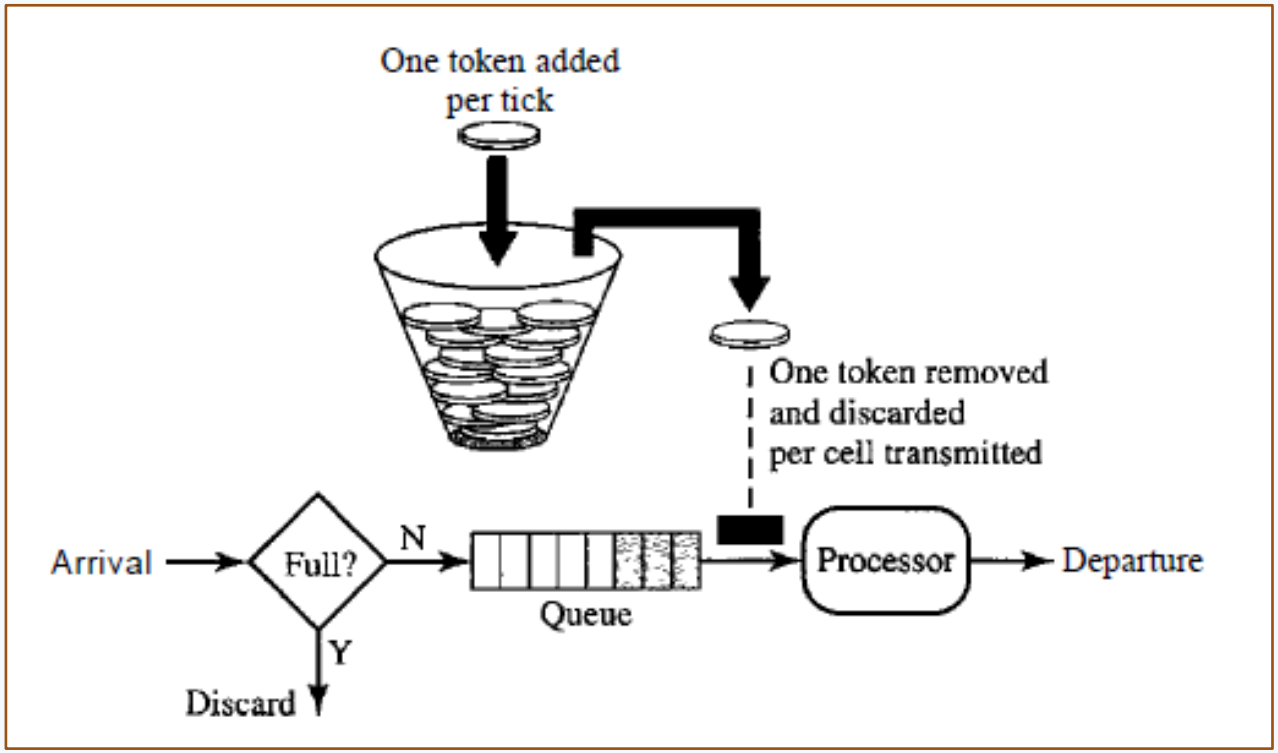

Sr no.	Token Bucket	Leaky Bucket
1	Token bucket is token dependent.	Leaky bucket is token independent.
2	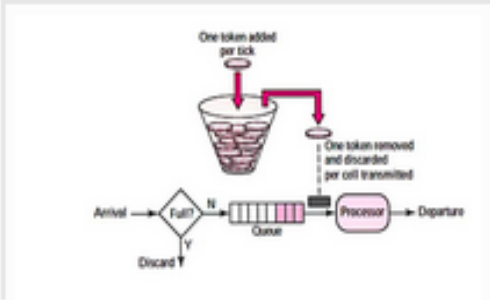 Block diagram token bucket.	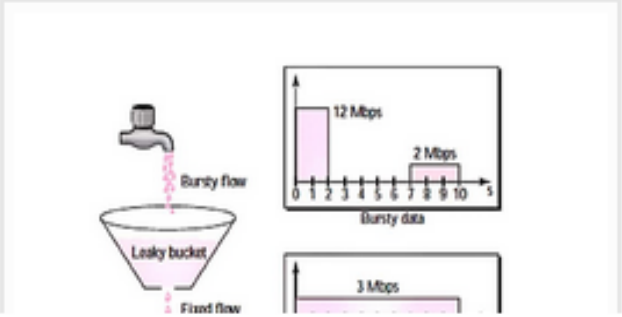 Block diagram of leaky bucket.
3	If bucket is full token are discarded but not the packet.	If bucket is full packet or data is discarded.
4	Token bucket allows for large bursts to be sent faster by speeding up the output.	Leaky bucket sends the packets at an average rate.
5	Token bucket allows saving up of tokens (permission) to send large bursts.	Leaky bucket does not allow saving a constant rate is maintained.
6	Packets can only Transmitted when there are enough token.	Packet are transmitted continuously.
7	It save token.	It is does not save token.

Thank You