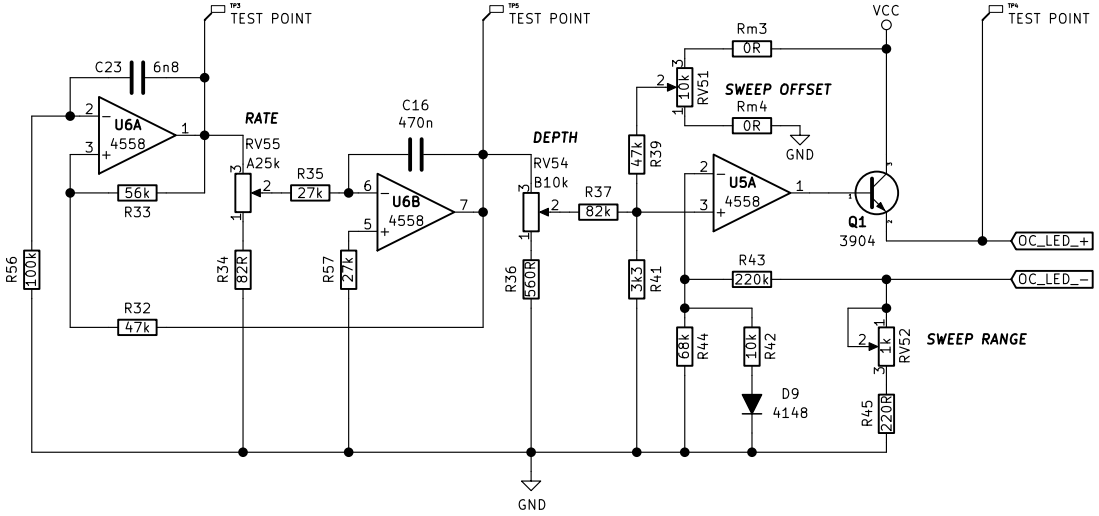

POWER FLAGS

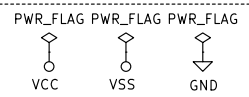

POWER SUPPLY DECOUPLING

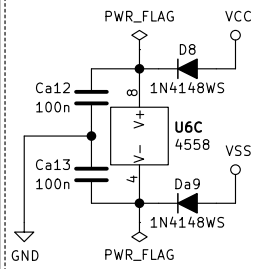

FUNCTION OF D8:
– ASYMM. SUPPLY?
– LFO TICK FILTER?
–> ALSO INCLUDE ON NEGATIVE RAIL?

Polarity of Da9 may be incorrect!
Worth breadboarding before first board spin!

#120–000
LFO & LED DRIVER PCBA

Sheet: /
File: #120–000 LFO & LED Driver PCBA.sch

Title:

Size: A4	Date:	**Rev:**
KiCad E.D.A. eeschema (5.1.2)–2		Id: 1/1