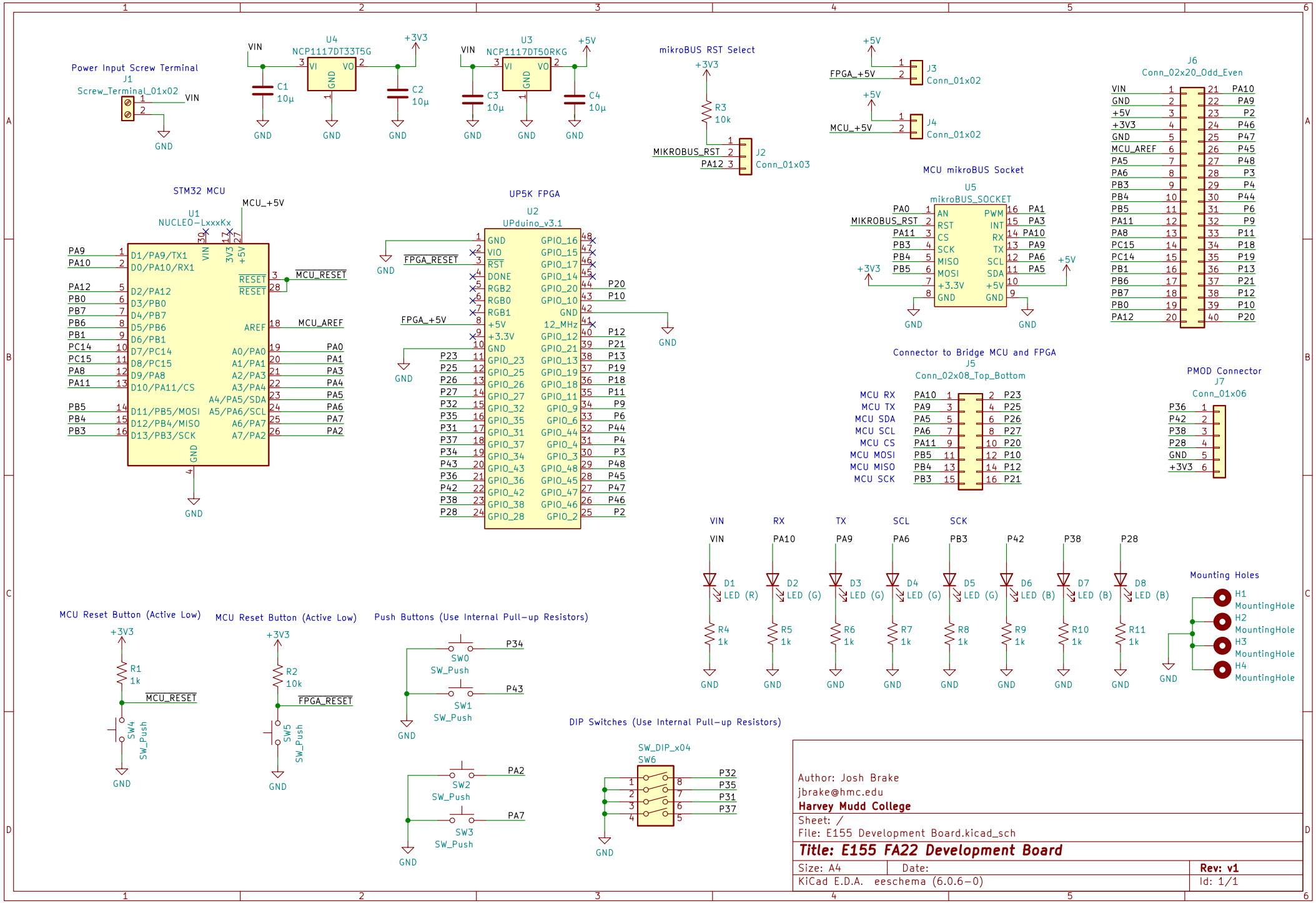
Power Input Screw Terminal
J1
Screw_Terminal_01x02
VIN
GND
U4
NCP1117DT33T5G
VI
VO
GND
C1
10µ
C2
10µ
+3V3
U3
NCP1117DT50RKG
C3
10µ
C4
10µ
+5V
mikroBUS RST Select
R3
10k
MIKROBUS_RST
PA12
J2
Conn_01x03
FPGA_+5V
J3
Conn_01x02
MCU_+5V
J4
Conn_01x02
J6
Conn_02x20_Odd_Even
VIN 1 21 PA10
GND 2 22 PA9
+5V 3 23 P2
+3V3 4 24 P46
GND 5 25 P47
MCU_AREF 6 26 P45
PA5 7 27 P48
PA6 8 28 P3
PB3 9 29 P4
PB4 10 30 P44
PB5 11 31 P6
PA11 12 32 P9
PA8 13 33 P11
PC15 14 34 P18
PC14 15 35 P19
PB1 16 36 P13
PB6 17 37 P21
PB7 18 38 P12
PB0 19 39 P10
PA12 20 40 P20
STM32 MCU
U1
NUCLEO-LxxxKx
MCU_+5V
D1/PA9/TX1
D0/PA10/RX1
D2/PA12
D3/PB0
D4/PB7
D5/PB6
D6/PB1
D7/PC14
D8/PC15
D9/PA8
D10/PA11/CS
D11/PB5/MOSI
D12/PB4/MISO
D13/PB3/SCK
RESET
MCU_RESET
AREF
MCU_AREF
A0/PA0
A1/PA1
A2/PA3
A3/PA4
A4/PA5/SDA
A5/PA6/SCL
A6/PA7
A7/PA2
UP5K FPGA
U2
UPduino_v3.1
FPGA_RESET
FPGA_+5V
GND
VIO
RST
DONE
RGB2
RGB0
RGB1
+5V
+3.3V
GPIO_23
GPIO_25
GPIO_26
GPIO_27
GPIO_32
GPIO_35
GPIO_31
GPIO_37
GPIO_34
GPIO_43
GPIO_36
GPIO_42
GPIO_38
GPIO_28
GPIO_16
GPIO_15
GPIO_17
GPIO_14
GPIO_20
GPIO_10
12_MHz
GPIO_12
GPIO_21
GPIO_13
GPIO_19
GPIO_18
GPIO_11
GPIO_9
GPIO_6
GPIO_44
GPIO_4
GPIO_3
GPIO_48
GPIO_45
GPIO_47
GPIO_46
GPIO_2
MCU mikroBUS Socket
U5
mikroBUS_SOCKET
AN
RST
CS
SCK
MISO
MOSI
+3.3V
GND
PWM
INT
RX
TX
SCL
SDA
+5V
Connector to Bridge MCU and FPGA
J5
Conn_02x08_Top_Bottom
MCU RX PA10 1 2 P23
MCU TX PA9 3 4 P25
MCU SDA PA5 5 6 P26
MCU SCL PA6 7 8 P27
MCU CS PA11 9 10 P20
MCU MOSI PB5 11 12 P10
MCU MISO PB4 13 14 P12
MCU SCK PB3 15 16 P21
PMOD Connector
J7
Conn_01x06
P36 1
P42 2
P38 3
P28 4
GND 5
+3V3 6
VIN
RX
TX
SCL
SCK
D1 LED (R)
D2 LED (G)
D3 LED (G)
D4 LED (G)
D5 LED (G)
D6 LED (B)
D7 LED (B)
D8 LED (B)
R4 1k
R5 1k
R6 1k
R7 1k
R8 1k
R9 1k
R10 1k
R11 1k
Mounting Holes
H1 MountingHole
H2 MountingHole
H3 MountingHole
H4 MountingHole
MCU Reset Button (Active Low)
R1
1k
SW4
SW_Push
MCU Reset Button (Active Low)
R2
10k
SW5
SW_Push
Push Buttons (Use Internal Pull-up Resistors)
SW0
SW_Push
P34
SW1
SW_Push
P43
SW2
SW_Push
PA2
SW3
SW_Push
PA7
DIP Switches (Use Internal Pull-up Resistors)
SW_DIP_x04
SW6
P32
P35
P31
P37
Author: Josh Brake
jbrake@hmc.edu
Harvey Mudd College
Sheet: /
File: E155 Development Board.kicad_sch
Title: E155 FA22 Development Board
Size: A4
Date:
Rev: v1
KiCad E.D.A. eeschema (6.0.6-0)
Id: 1/1