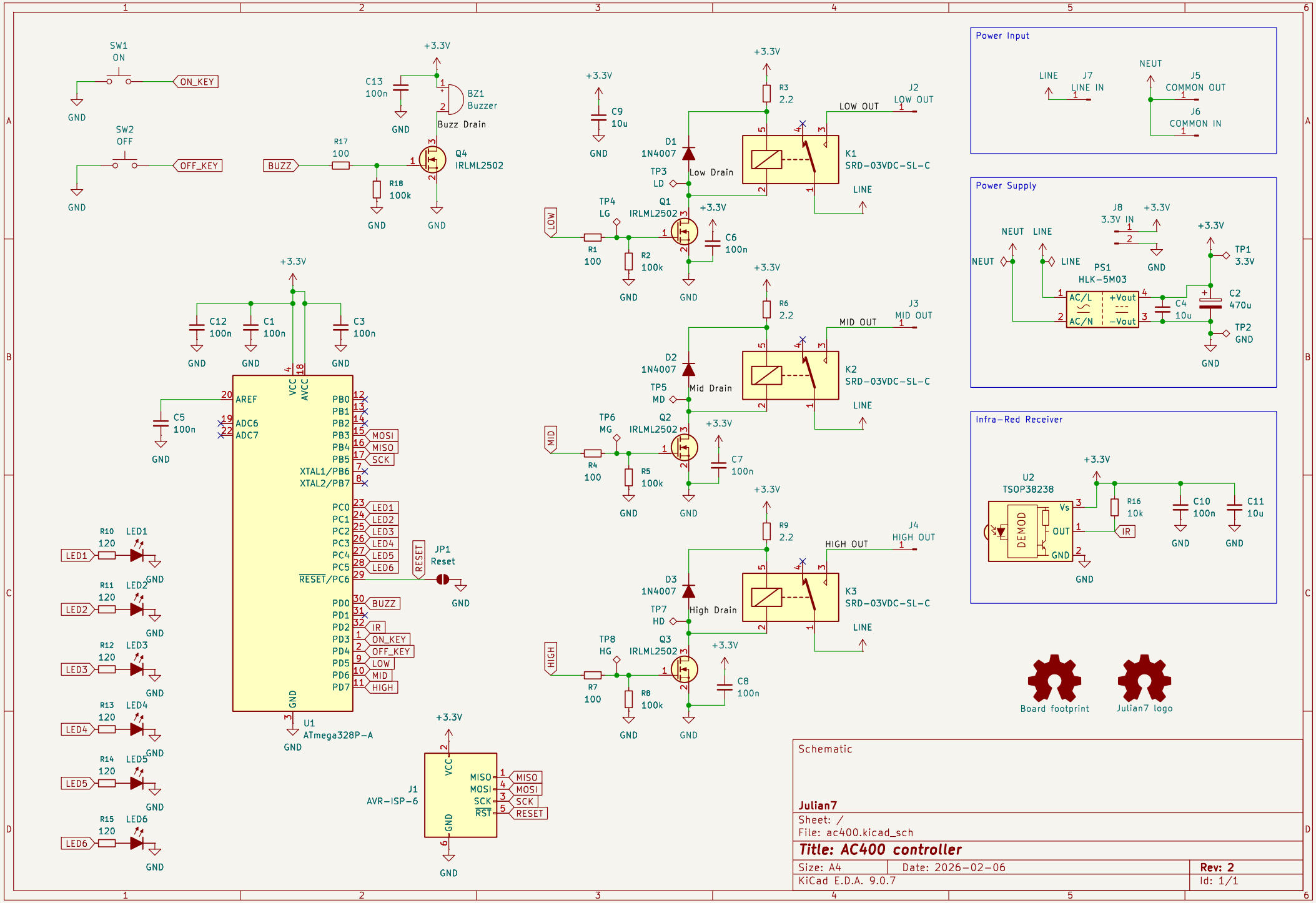

Schematic

Julian7

Sheet: /

File: ac400.kicad_sch

Title: AC400 controller

Size: A4	Date: 2026-02-06	**Rev: 2**
KiCad E.D.A. 9.0.7		Id: 1/1