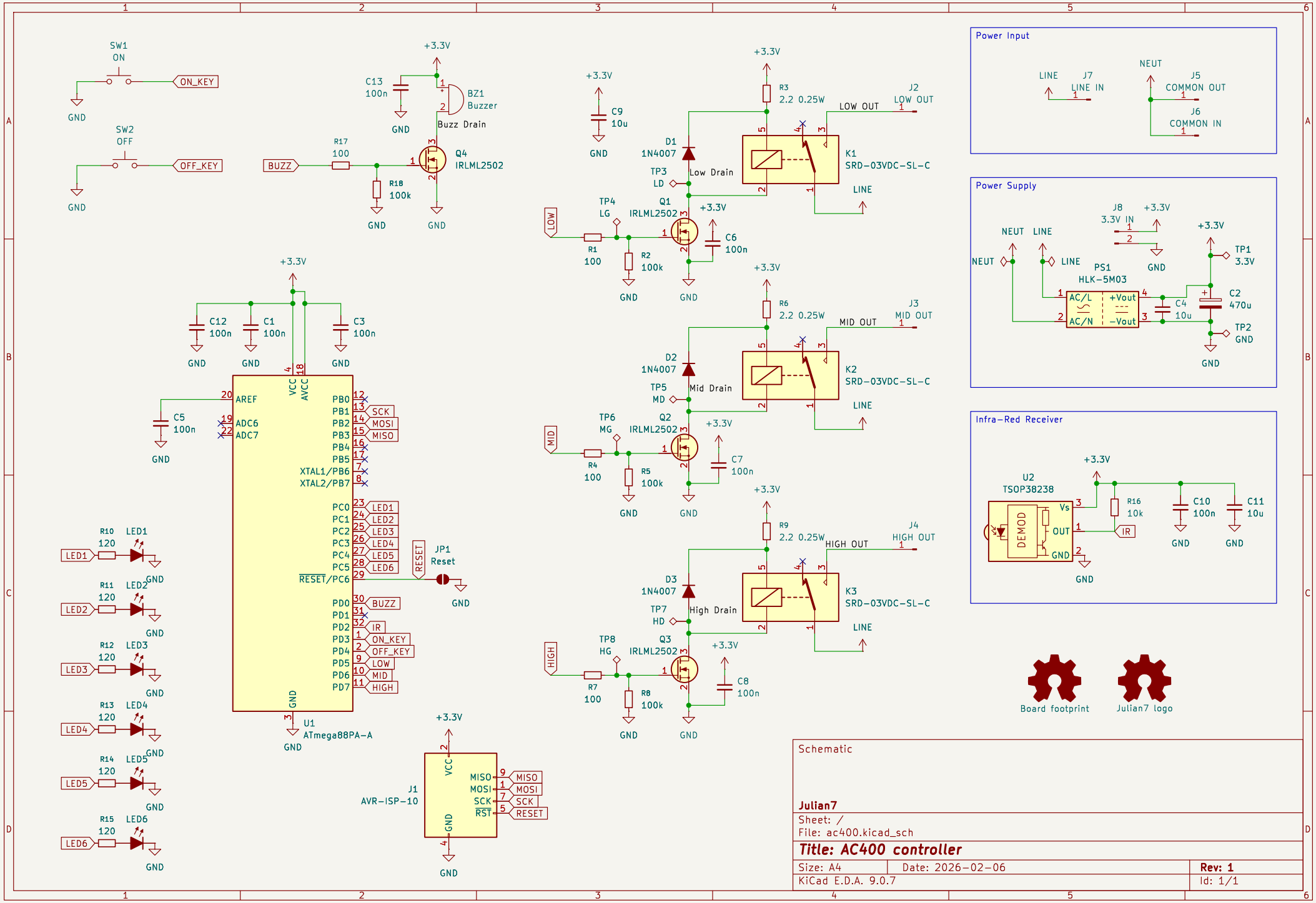
SW1
ON
ON_KEY
GND
SW2
OFF
OFF_KEY
GND
+3.3V
C13
100n
GND
BZ1
Buzzer
Buzz Drain
BUZZ
R17
100
R18
100k
Q4
IRLML2502
GND
GND
+3.3V
C9
10u
GND
R3
2.2 0.25W
LOW OUT
J2
LOW OUT
D1
1N4007
Low Drain
TP3
LD
K1
SRD-03VDC-SL-C
LINE
TP4
LG
Q1
IRLML2502
+3.3V
C6
100n
LOW
R1
100
R2
100k
GND
GND
+3.3V
R6
2.2 0.25W
MID OUT
J3
MID OUT
D2
1N4007
Mid Drain
TP5
MD
K2
SRD-03VDC-SL-C
LINE
TP6
MG
Q2
IRLML2502
+3.3V
C7
100n
MID
R4
100
R5
100k
GND
GND
+3.3V
R9
2.2 0.25W
HIGH OUT
J4
HIGH OUT
D3
1N4007
High Drain
TP7
HD
K3
SRD-03VDC-SL-C
LINE
TP8
HG
Q3
IRLML2502
+3.3V
C8
100n
HIGH
R7
100
R8
100k
GND
GND
Power Input
LINE
J7
LINE IN
NEUT
J5
COMMON OUT
J6
COMMON IN
Power Supply
NEUT
LINE
J8
3.3V IN
+3.3V
GND
PS1
HLK-5M03
AC/L
AC/N
+Vout
-Vout
C4
10u
C2
470u
TP1
3.3V
TP2
GND
Infra-Red Receiver
+3.3V
U2
TSOP38238
DEMOD
Vs
OUT
GND
R16
10k
IR
C10
100n
C11
10u
GND
GND
Board footprint
Julian7 logo
+3.3V
C12
100n
C1
100n
C3
100n
GND
GND
GND
C5
100n
GND
AREF
VCC
AVCC
ADC6
ADC7
PB0
PB1
PB2
PB3
PB4
PB5
XTAL1/PB6
XTAL2/PB7
SCK
MOSI
MISO
PC0
PC1
PC2
PC3
PC4
PC5
RESET/PC6
LED1
LED2
LED3
LED4
LED5
LED6
RESET
JP1
Reset
PD0
PD1
PD2
PD3
PD4
PD5
PD6
PD7
BUZZ
IR
ON_KEY
OFF_KEY
LOW
MID
HIGH
GND
U1
ATmega88PA-A
GND
R10
120
LED1
R11
120
LED2
R12
120
LED3
R13
120
LED4
R14
120
LED5
R15
120
LED6
GND
+3.3V
J1
AVR-ISP-10
VCC
MISO
MOSI
SCK
RST
RESET
GND
Schematic
Julian7
Sheet: /
File: ac400.kicad_sch
Title: AC400 controller
Size: A4
Date: 2026-02-06
Rev: 1
KiCad E.D.A. 9.0.7
Id: 1/1