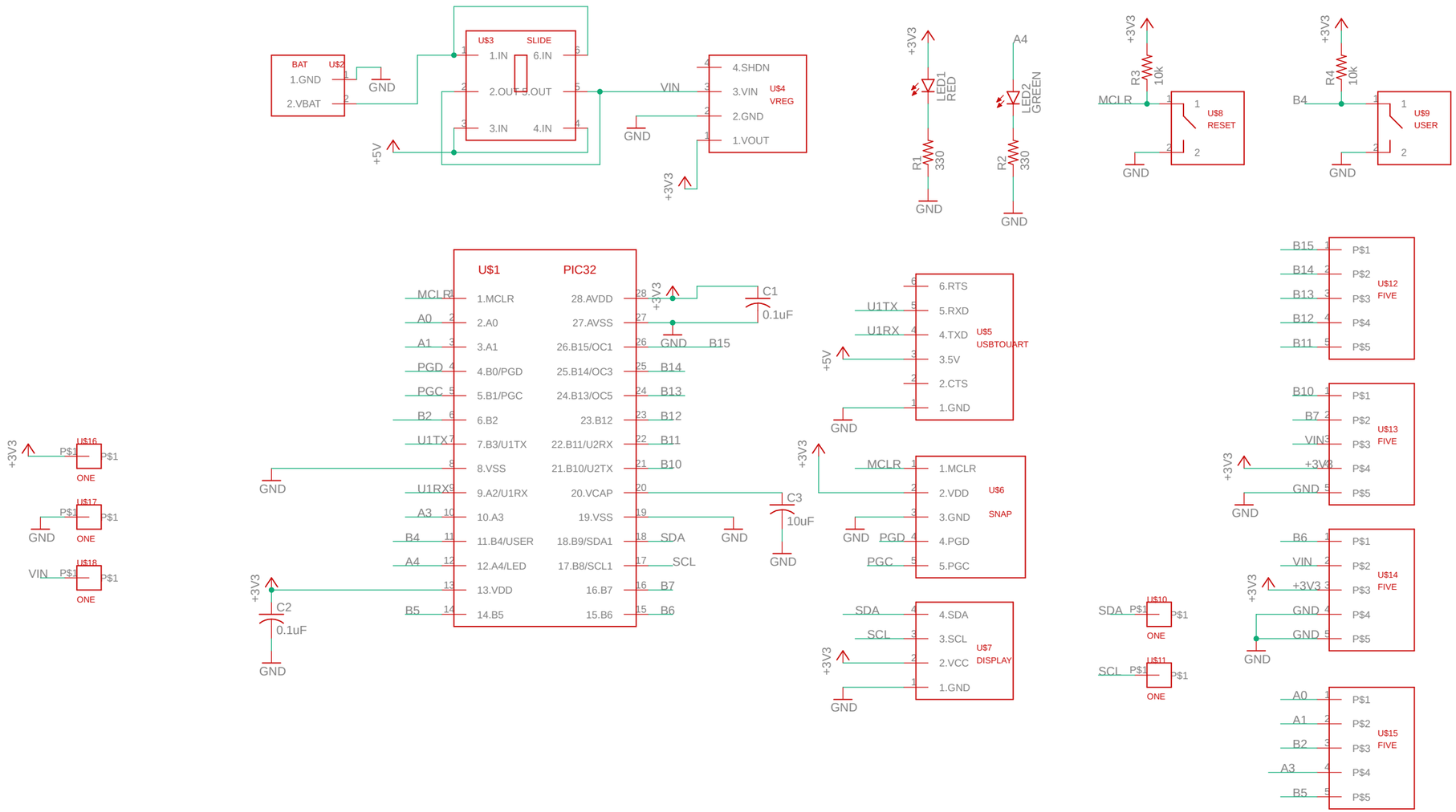
BAT
U$2
1.GND
2.VBAT
GND
U$3
SLIDE
1.IN
6.IN
2.OUT
5.OUT
3.IN
4.IN
+5V
VIN
U$4
VREG
4.SHDN
3.VIN
2.GND
1.VOUT
GND
+3V3
LED1
RED
R1
330
GND
A4
LED2
GREEN
R2
330
GND
+3V3
R3
10k
MCLR
U$8
RESET
GND
+3V3
R4
10k
B4
U$9
USER
GND
U$1
PIC32
MCLR
A0
A1
PGD
PGC
B2
U1TX
U1RX
A3
B4
A4
B5
1.MCLR
2.A0
3.A1
4.B0/PGD
5.B1/PGC
6.B2
7.B3/U1TX
8.VSS
9.A2/U1RX
10.A3
11.B4/USER
12.A4/LED
13.VDD
14.B5
28.AVDD
27.AVSS
26.B15/OC1
25.B14/OC3
24.B13/OC5
23.B12
22.B11/U2RX
21.B10/U2TX
20.VCAP
19.VSS
18.B9/SDA1
17.B8/SCL1
16.B7
15.B6
+3V3
C1
0.1uF
GND
B15
B14
B13
B12
B11
B10
SDA
SCL
B7
B6
C3
10uF
C2
0.1uF
U$5
USBTOUART
6.RTS
5.RXD
4.TXD
3.5V
2.CTS
1.GND
U$6
SNAP
1.MCLR
2.VDD
3.GND
4.PGD
5.PGC
U$7
DISPLAY
4.SDA
3.SCL
2.VCC
1.GND
U$12
FIVE
U$13
FIVE
U$14
FIVE
U$15
FIVE
P$1
P$2
P$3
P$4
P$5
U$16
U$17
U$18
U$10
U$11
ONE