REV.	DESCRIPTION	DATE
A	NEW DRAWING	11/15/2005
B	added dimension	2/11/2008

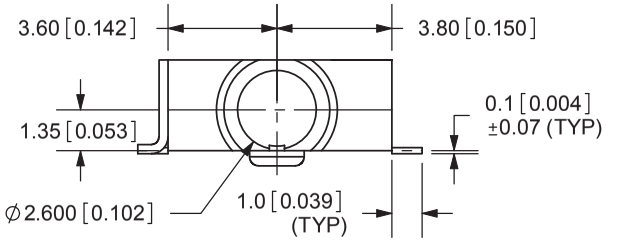

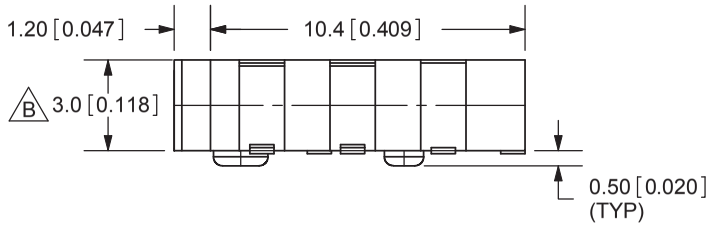

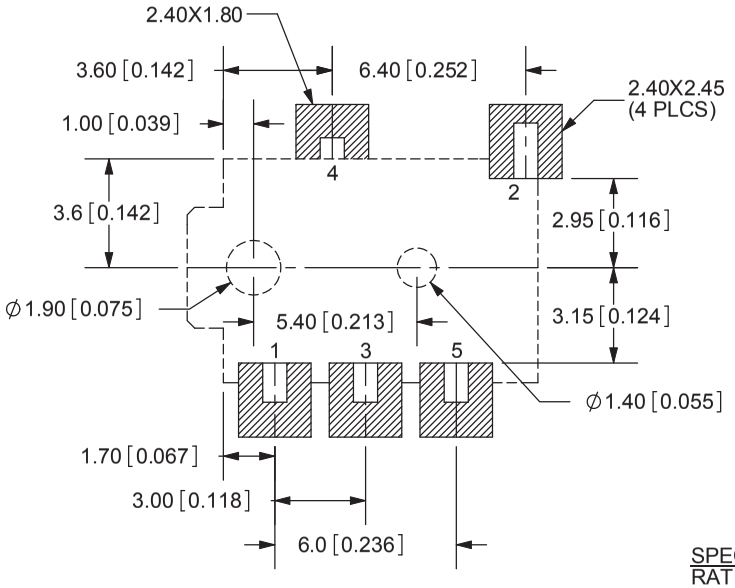

PCB LAYOUT
TOP VIEW

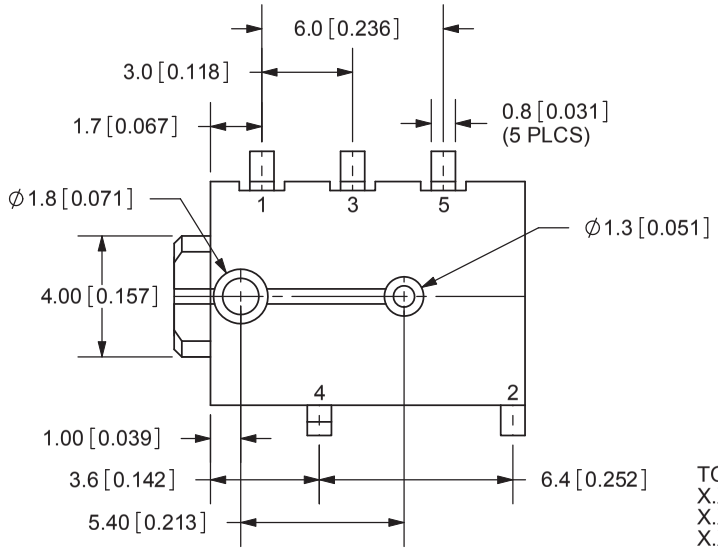

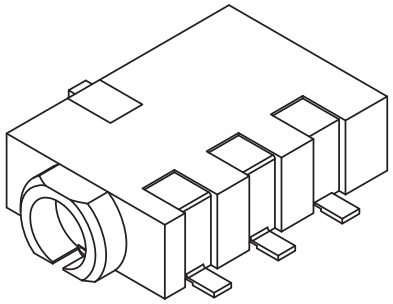

TOLERANCE:
X.X ±0.2mm
X.XX ±0.1mm
X.XXX ±0.05mm

MODEL NO.	SJ1-2535-SMT
SCHEMATIC	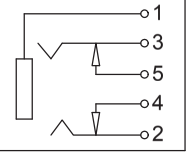

SPECIFICATIONS:
RATING: 16V DC @ 300mA
CONTACT RESISTANCE: 30m OHMS MAX
INSULATION RESISTANCE: 50M OHMS MIN: 500V DC
VOLTAGE WITHSTAND: 500V AC R.M.S. FOR 1 MINUTE
LIFE: 5,000 CYCLES
OPERATING TEMP: -25 ~ +85C

	MATERIAL	PLATING
TERMINAL 1	Copper Alloy	Gold
TERMINAL 2	Copper Alloy	Gold
TERMINAL 3	Copper Alloy	Gold
TERMINAL 4	Brass	Gold
TERMINAL 5	Brass	Gold
HOUSING	PA6T	

CUI INC
20050 SW 112th Ave.
Tualatin, OR 97062
Phone: 503-612-2300
800-275-4899
Fax: 503-612-2383
Website: www.cui.com

TITLE: 2.5mm SMT AUDIO JACK-STEREO
REV: B
PART NO. SJ1-2535-SMT
UNITS: MM [INCHES]
DRAWN BY: ZRJ
APPROVED BY:
SCALE: 4:1

PC FILE NAME: SJ1-2535-SMT

COPYRIGHT 2008 BY CUI INC.