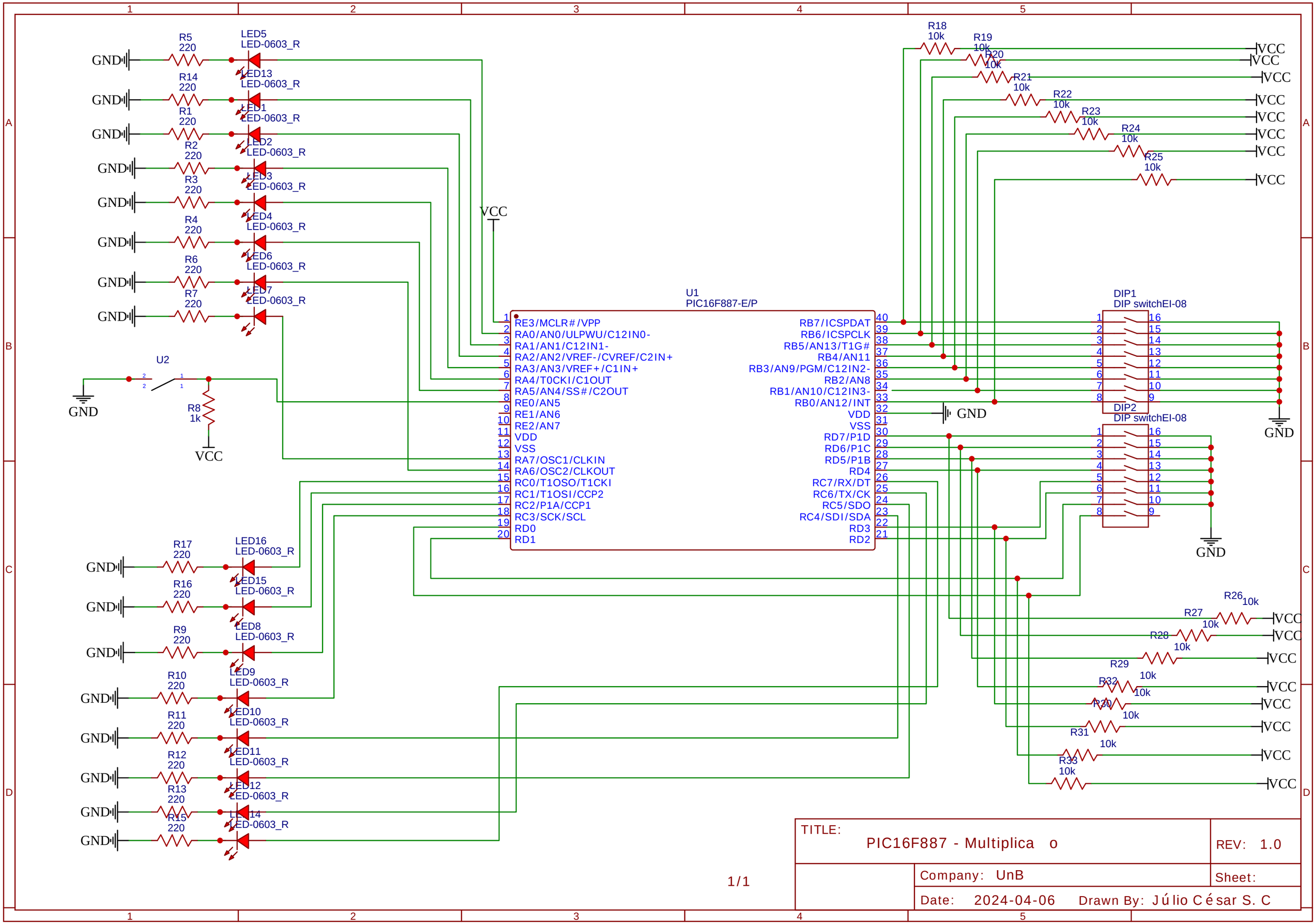
U1
PIC16F887-E/P
RE3/MCLR#/VPP
RA0/AN0/ULPWU/C12IN0-
RA1/AN1/C12IN1-
RA2/AN2/VREF-/CVREF/C2IN+
RA3/AN3/VREF+/C1IN+
RA4/T0CKI/C1OUT
RA5/AN4/SS#/C2OUT
RE0/AN5
RE1/AN6
RE2/AN7
VDD
VSS
RA7/OSC1/CLKIN
RA6/OSC2/CLKOUT
RC0/T1OSO/T1CKI
RC1/T1OSI/CCP2
RC2/P1A/CCP1
RC3/SCK/SCL
RD0
RD1
RB7/ICSPDAT
RB6/ICSPCLK
RB5/AN13/T1G#
RB4/AN11
RB3/AN9/PGM/C12IN2-
RB2/AN8
RB1/AN10/C12IN3-
RB0/AN12/INT
VDD
VSS
RD7/P1D
RD6/P1C
RD5/P1B
RD4
RC7/RX/DT
RC6/TX/CK
RC5/SDO
RC4/SDI/SDA
RD3
RD2
DIP1
DIP switchEI-08
DIP2
DIP switchEI-08
U2
R8
1k
GND
VCC
TITLE:
PIC16F887 - Multiplica o
REV: 1.0
Company: UnB
Sheet:
Date: 2024-04-06
Drawn By: Júlio César S. C
1/1