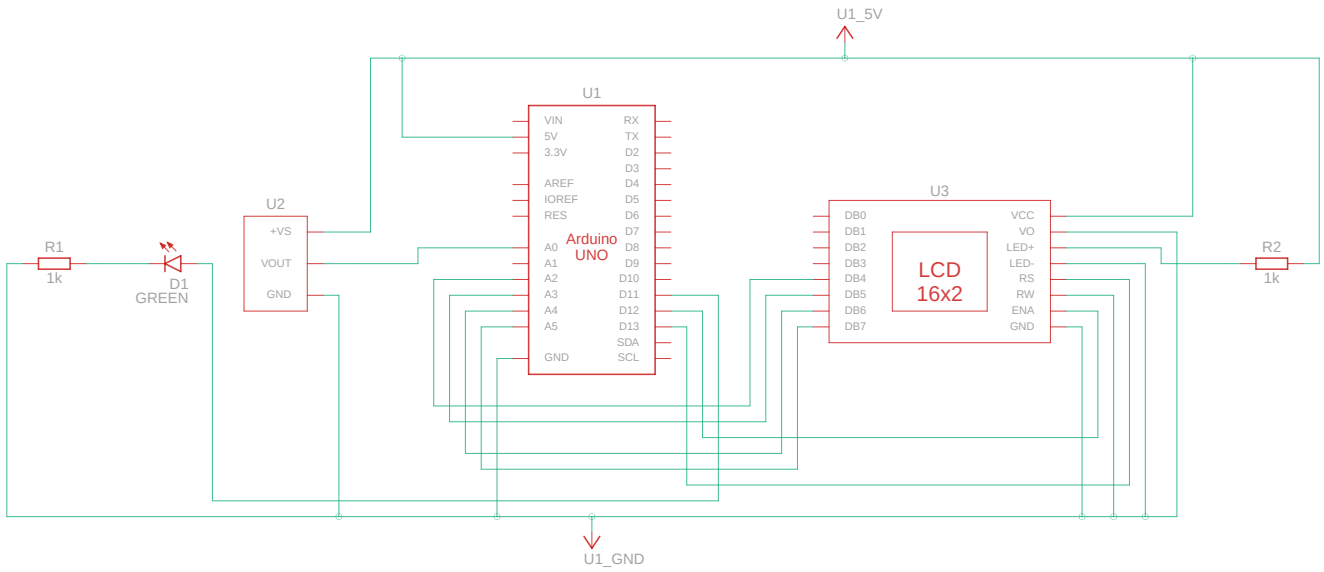

Made with Tinkercad®

Title: Sensoriamento Industrial - Microcontrolados A	
Date: 10/02/2022 21:14:08	Sheet: 1/1