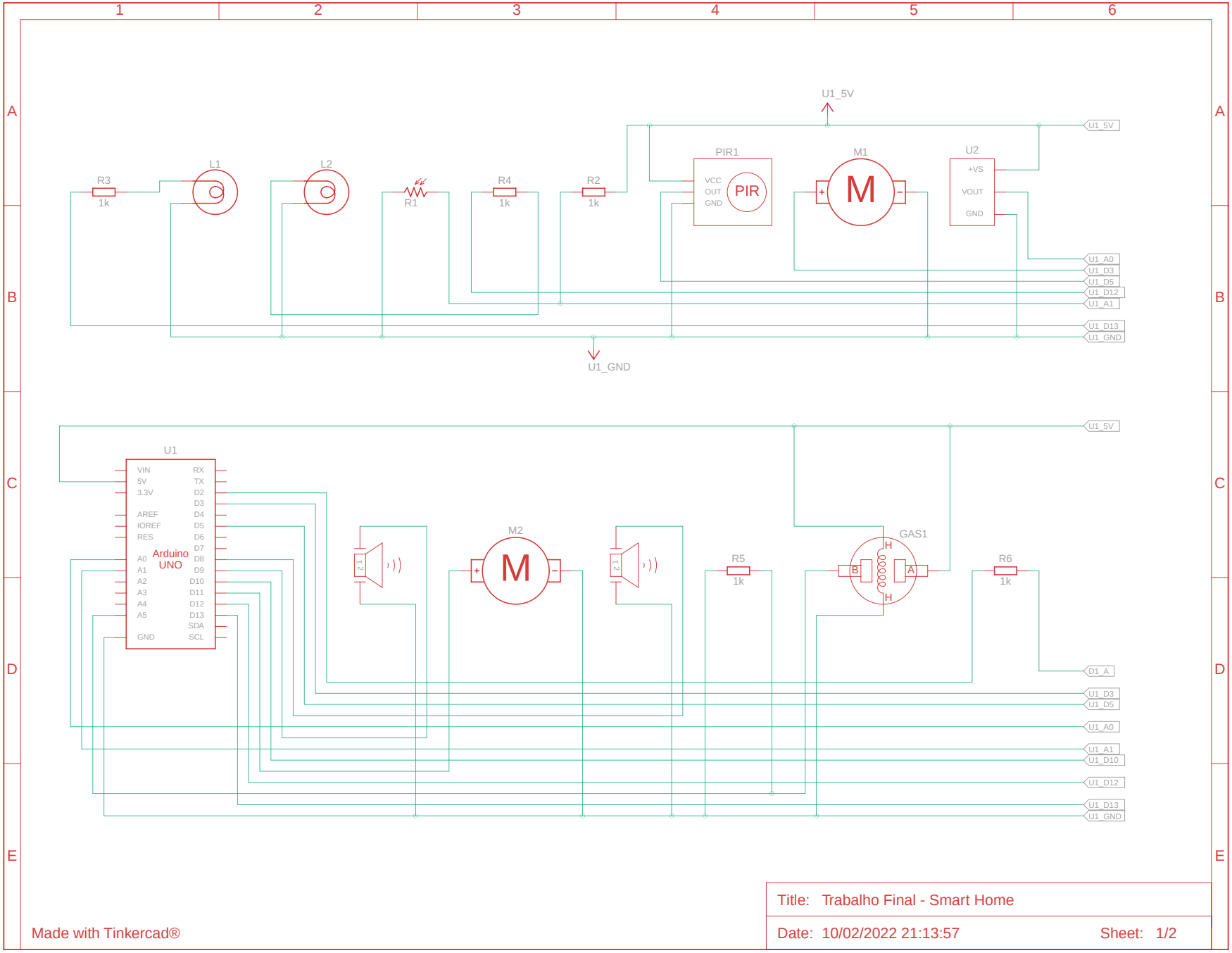

Made with Tinkercad®

Title: Trabalho Final - Smart Home

Date: 10/02/2022 21:13:57

Sheet: 1/2

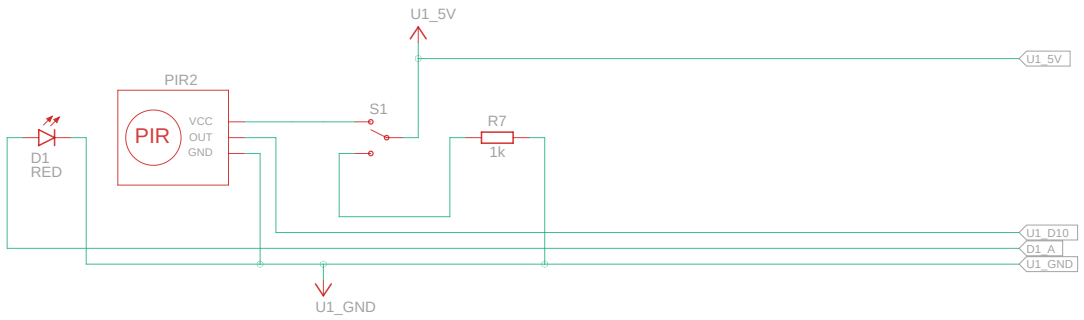

Made with Tinkercad®

Title: Trabalho Final - Smart Home

Date: 10/02/2022 21:13:57

Sheet: 2/2