Recurrent Neural Network

Jungtaek Kim (jtkim@postech.ac.kr)

Machine Learning Group,
Department of Computer Science and Engineering, POSTECH,
77 Cheongam-ro, Nam-gu, Pohang 37673,
Gyeongsangbuk-do, Republic of Korea

February 27, 2019

Table of Contents

Recurrent Neural Network

Recurrent Neural Network

Recurrent Neural Network

- Recurrent neural network (RNN) is a class of neural networks which has connections between nodes from a directed graph along a sequence.
- It can learn temporal dynamic behavior for a sequence.
- There are long short-term memory (LSTM) and gated recurrent unit (GRU).

Recurrent Neural Network

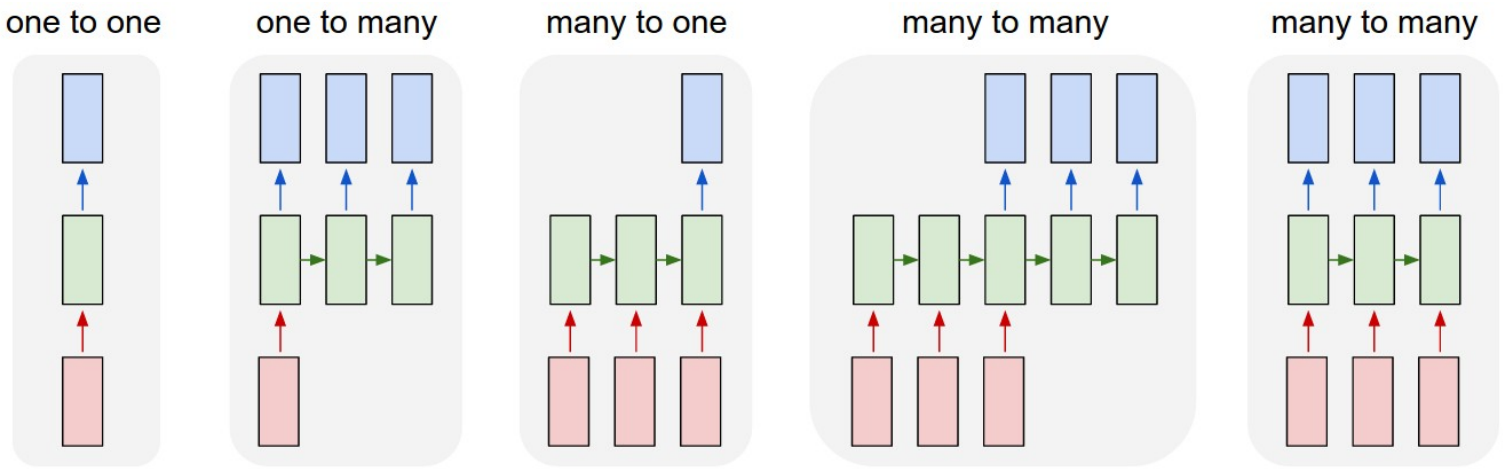

Figure 1:
http://karpathy.github.io/2015/05/21/rnn-effectiveness/

LSTM and GRU

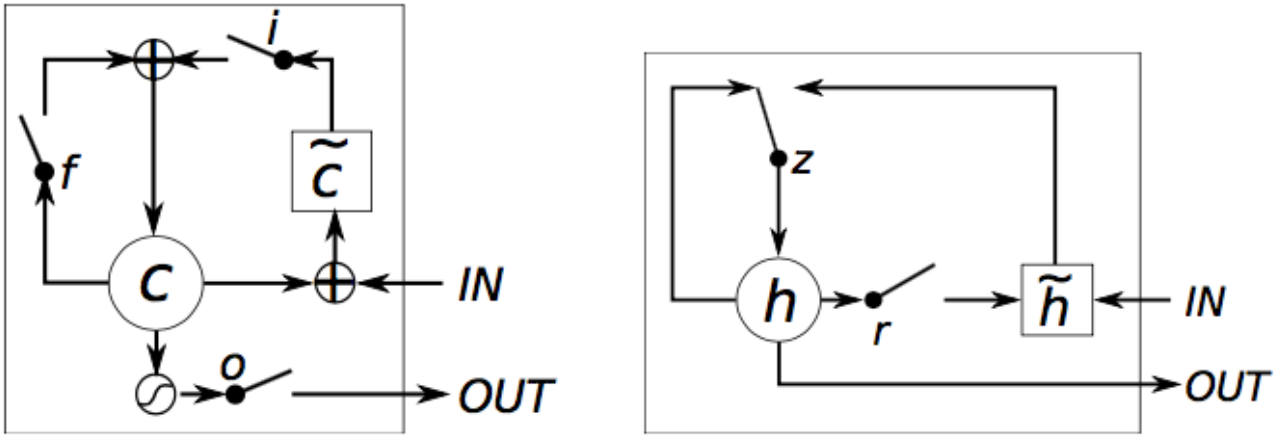

(a) Long Short-Term Memory (b) Gated Recurrent Unit

Figure 1: Illustration of (a) LSTM and (b) gated recurrent units. (a) i, f and o are the input, forget and output gates, respectively. c and $\tilde{c}$ denote the memory cell and the new memory cell content. (b) r and z are the reset and update gates, and h and $\tilde{h}$ are the activation and the candidate activation.

Figure 2:
https://medium.com/paper-club/grus-vs-lstms-e9d8e2484848

Pros and Cons of Recurrent Neural Networks

Pros

- It can handle time series data.
- It can take any length of inputs.
- Model size is not increased with respect to the length of inputs.
- Weights are shared over inputs.

Cons

- It is still short-term memory.
- It is hard to train.
- Computation is slow.

References

- Professor Seungjin Choi's materials
- http://karpathy.github.io/2015/05/21/rnn-effectiveness/
- Wikipedia

Thank you.